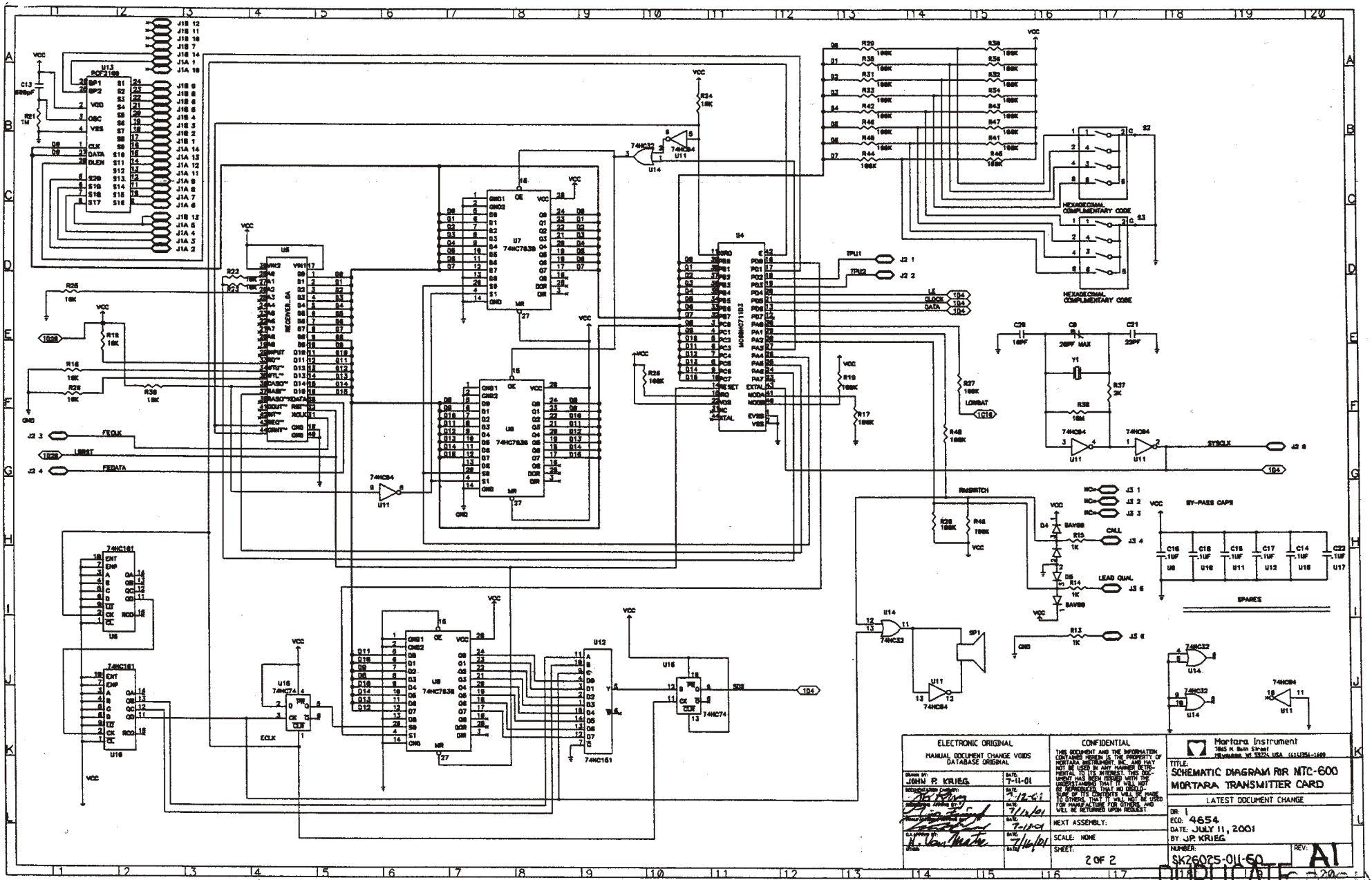

ELECTRONIC ORIGINAL
MANUAL DOCUMENT CHANGE VOIDS DATABASE ORIGINAL

DRAWN BY: JOHN P. KRIEG — DATE: 7-11-01
DOCUMENT ADMIN CHANGE: — DATE: 7-12-01
MANUFACTURING APPROVAL BY: — DATE: 7/12/01
PRODUCT ASSURANCE BY: — DATE: 7-12-01
QA APPROVAL BY: — DATE: 7/12/01

CONFIDENTIAL

THIS DOCUMENT AND THE INFORMATION CONTAINED HEREIN IS THE PROPERTY OF MORTARA INSTRUMENT, INC. AND MAY NOT BE USED IN ANY MANNER DETRIMENTAL TO ITS INTEREST. THIS DOCUMENT HAS BEEN ISSUED WITH THE UNDERSTANDING THAT IT WILL NOT BE REPRODUCED, THAT NO DISCLOSURE OF ITS CONTENTS WILL BE MADE TO OTHERS, THAT IT WILL NOT BE USED FOR MANUFACTURE FOR OTHERS AND WILL BE RETURNED UPON REQUEST.

NEXT ASSEMBLY:

SCALE: NONE

SHEET: 2 OF 2

Mortara Instrument
3545 N. 84th Street
Milwaukee, WI 53216 USA (414)354-1649

TITLE: SCHEMATIC DIAGRAM FOR NTC-600 MORTARA TRANSMITTER CARD

LATEST DOCUMENT CHANGE

DR: 1
ECO: 4654
DATE: JULY 11, 2001
BY: JP. KRIEG

NUMBER: SK26025-011-60
REV: A1

DUPLICATE ORIGINAL