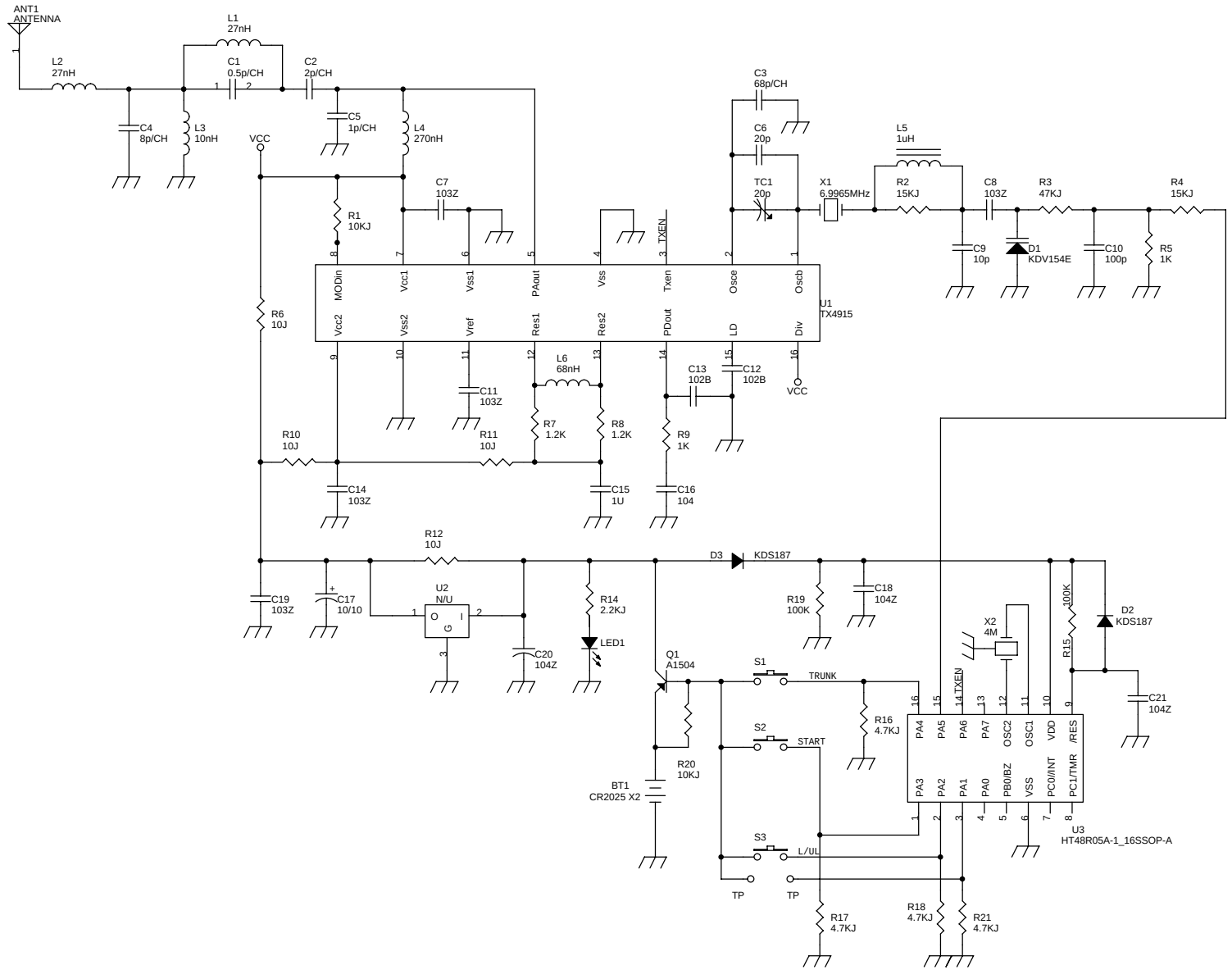

Title		
Size A3	Document Number <Doc> Page Modify Date = Wednesday, July 09, 2003	Rev A
Date:	Sheet 1 of 1	