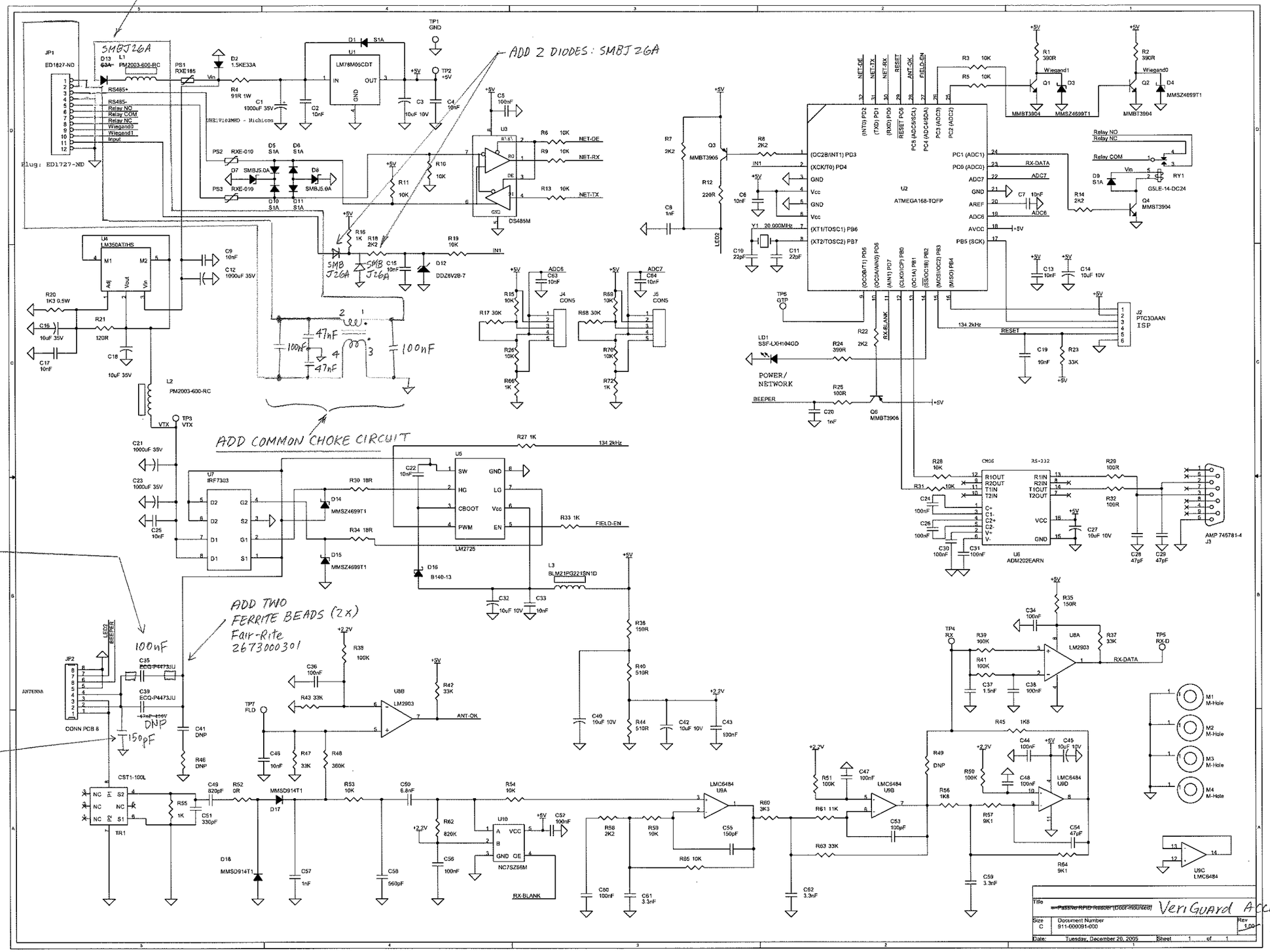
CHANGE TO TYPE SMBJ26A
ADD 2 DIODES: SMBJ26A
ADD COMMON CHOKE CIRCUIT
COMBINE TWO 47nF CAPS to one 100nF CAP.
ADD TWO FERRITE BEADS (2x) Fair-Rite 2673000301
ADD FILTER CAP 150pF
Title Passive RFID Reader (Door-mounted) VeriGuard Access Control Reader 1.10
Size C
Document Number 911-000091-000
Rev 1.00
Date: Tuesday, December 20, 2005
Sheet 1 of 1