FCC ID: HDT90482

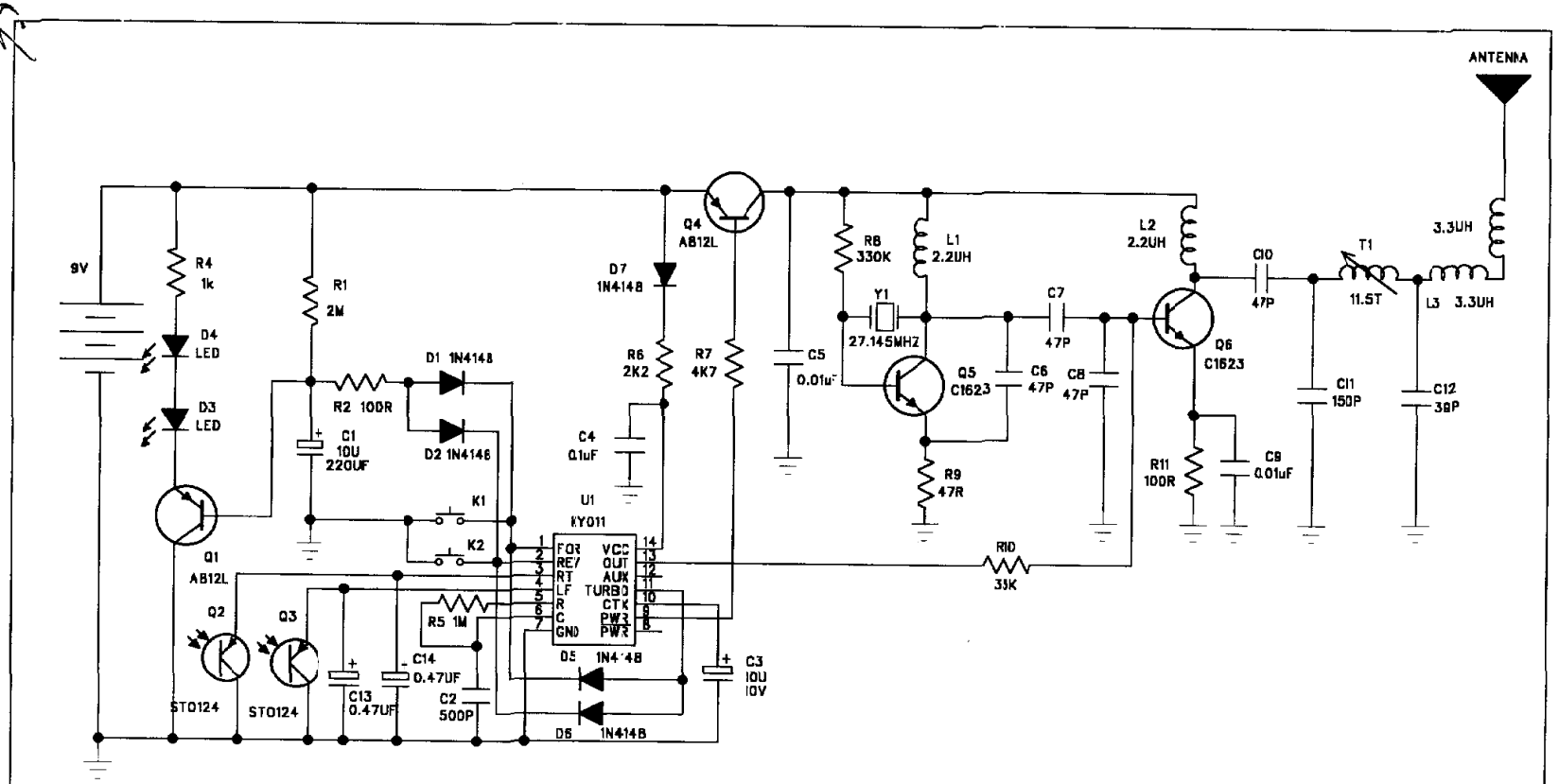

MODEL NO.: MONSTER TRUCK		COMPANY: KIN YAT INDUSTRIAL CO., LTD.	
ENGINGGR:	WQS	IC NO:	
NUMBER:	TX-051	PPODUCT NUMBER:	F90482
PCB NO:	80TX051-1 80KY 80TX05	DATE:	2001.02.16