802 N. Twin Oaks Valley Road, Suite 105 • San Marcos, CA 92069 • U.S.A.
TEL (760) 471-2100 • FAX (760) 471-2121
http://www.rfexposurelab.com

CERTIFICATE OF COMPLIANCE
SAR EVALUATION

Vocollect, Inc. 703 Rodi Road Pittsburgh, PA 15235		Dates of Test: Test Report Number:	June 20-21, 2018 SAR.20180610

FCC ID:	HD5-TAP1000-01
IC Certificate:	1693B-TAP100001
Model(s):	A700X Series
Contains WLAN Module:	ublox Model EMMY-W163B; FCC ID: XPYEMMYW163; IC: 8595A-EMMTW163
Test Sample:	Engineering Unit Same as Production
Serial Number(s):	7418200044, 7518200141, 7618230017
Equipment Type:	Wireless Handheld Reader
Classification:	Portable Transmitter Next to Body
TX Frequency Range:	2412 – 2462 MHz; 5180 – 5320 MHz; 5500 – 5700 MHz; 5745 – 5825 MHz
Frequency Tolerance:	± 2.5 ppm
Maximum RF Output:	2450 MHz (b) – 19.50 dB, 2450 MHz (g) – 17.50 dB, 2450 MHz (n20) – 17.50 dB, 2450 MHz (n40) – 17.50 dB, 5250 MHz (a) – 17.50 dB, 5250 MHz (n20) – 17.50 dB, 5250 MHz (n40) – 17.50 dB, 5250 MHz (ac80) – 17.50 dB, 5600 MHz (a) – 17.50 dB, 5600 MHz (n20) – 17.50 dB, 5600 MHz (n40) – 17.50 dB, 5600 MHz (ac80) – 17.50 dB, 5800 MHz (a) – 17.50 dB, 5800 MHz (n20) – 17.50 dB, 5800 MHz (n40) – 17.50 dB, 5800 MHz (ac80) – 17.50 dB Conducted
Signal Modulation:	DSSS, OFDM
Antenna Type:	Internal PIFA Antenna
Application Type:	Certification
FCC Rule Parts:	Part 2, 15C, 15E
KDB Test Methodology:	KDB 447498 D01 v06, KDB 248227 v02r02
Industry Canada:	RSS-102, Safety Code 6
Maximum SAR Value:	0.70 W/kg Reported
Max. Simultaneous SAR:	0.71 W/kg Reported
Separation Distance:	0 mm

This wireless mobile and/or portable device has been shown to be compliant for localized specific absorption rate (SAR) for uncontrolled environment/general exposure limits specified in ANSI/IEEE Std. C95.1-1992 and had been tested in accordance with the measurement procedures specified in IEEE 1528-2003, IEC 62209-2 and OET Bulletin 65 Supp. C (See test report).

I attest to the accuracy of the data. All measurements were performed by myself or were made under my supervision and are correct to the best of my knowledge and belief. I assume full responsibility for the completeness of these measurements and vouch for the qualifications of all persons taking them.

RF Exposure Lab, LLC certifies that no party to this application is subject to a denial of Federal benefits that includes FCC benefits pursuant to Section 5301 of the Anti-Drug Abuse Act of 1988, 21 U.S.C. 853(a).

Jay M. Moulton
Vice President

ACCREDITED
Testing Cert. # 2387.01

© 2018 RF Exposure Lab, LLC
This report shall not be reproduced except in full without the written approval of RF Exposure Lab, LLC.

Table of Contents

1. Introduction 3
SAR Definition [5] 4
2. SAR Measurement Setup 5
Robotic System 5
System Hardware 5
System Electronics 6
Probe Measurement System 6
3. Probe and Dipole Calibration 14
4. Phantom & Simulating Tissue Specifications 15
Head & Body Simulating Mixture Characterization 15
5. ANSI/IEEE C95.1 – 1992 RF Exposure Limits [2] 16
Uncontrolled Environment 16
Controlled Environment 16
6. Measurement Uncertainty 17
7. System Validation 18
Tissue Verification 18
Test System Verification 18
8. SAR Test Data Summary 19
Procedures Used To Establish Test Signal 19
Device Test Condition 19
SAR Data Summary – 2450 MHz Body 802.11b 30
SAR Data Summary – 5250 MHz Body 802.11a 31
SAR Data Summary – 5600 MHz Body 802.11a 32
SAR Data Summary – 5800 MHz Body 802.11a 33
SAR Data Summary – Simultaneous Evaluation 34
9. Test Equipment List 35
10. Conclusion 36
11. References 37
Appendix A – System Validation Plots and Data 38
Appendix B – SAR Test Data Plots 48
Appendix C – SAR Test Setup Photos 61
Appendix D – Probe Calibration Data Sheets 68
Appendix E – Dipole Calibration Data Sheets 107
Appendix F – Phantom Calibration Data Sheets 132
Appendix G – Validation Summary 134

© 2018 RF Exposure Lab, LLC

This report shall not be reproduced except in full without the written approval of RF Exposure Lab, LLC.

1. Introduction

This measurement report shows compliance of the Vocollect, Inc. Model A700X Series Family FCC ID: HD5-TAP1000-01 with FCC Part 2, 1093, ET Docket 93-62 Rules for mobile and portable devices and IC Certificate: 1693B-TAP100001 with RSS102 & Safety Code 6. The FCC have adopted the guidelines for evaluating the environmental effects of radio frequency radiation in ET Docket 93-62 on August 6, 1996 to protect the public and workers from the potential hazards of RF emissions due to FCC regulated portable devices. [1], [6]

The test results recorded herein are based on a single type test of Vocollect, Inc. Model A700X Series Family and therefore apply only to the tested sample.

The test procedures, as described in ANSI C95.1 – 1999 Standard for Safety Levels with Respect to Human Exposure to Radio Frequency Electromagnetic Fields, 3 kHz to 300 GHz [2], ANSI C95.3 – 2002 Recommended Practice for the Measurement of Potentially Hazardous Electromagnetic Fields [3], FCC OET Bulletin 65 Supp. C – 2001 [4], IEEE Std.1528 – 2003 Recommended Practice [5], and Industry Canada Safety Code 6 Limits of Human Exposure to Radiofrequency Electromagnetic Fields in the Frequency Range from 3kHz to 300 GHz were employed.

The following table indicates all the wireless technologies operating in the A700X Series Family wireless handheld reader. The table also shows the tolerance for the power level for each mode.

Band	Technology	3GPP Nominal Power dBm	Setpoint Nominal Power dBm	Tolerance dBm	Lower Tolerance dBm	Upper Tolerance dBm
WLAN – 2.4 GHz	802.11b	N/A	18.0	±1.5	16.5	19.5
WLAN – 2.4 GHz	802.11gn	N/A	16.0	±1.5	14.5	17.5
WLAN – 5 GHz Band I	802.11an	N/A	16.0	±1.5	14.5	17.5
WLAN – 5 GHz Band I	802.11ac80	N/A	16.0	±1.5	14.5	17.5
WLAN – 5 GHz Band IIA	802.11an	N/A	16.0	±1.5	14.5	17.5
WLAN – 5 GHz Band IIA	802.11ac80	N/A	16.0	±1.5	14.5	17.5
WLAN – 5 GHz Band IIC	802.11an	N/A	16.0	±1.5	14.5	17.5
WLAN – 5 GHz Band IIC	802.11ac80	N/A	16.0	±1.5	14.5	17.5
WLAN – 5 GHz Band III	802.11an	N/A	16.0	±1.5	14.5	17.5
WLAN – 5 GHz Band III	802.11ac80	N/A	16.0	±1.5	14.5	17.5
BT – BDR	Bluetooth	N/A	10.0	±2.0	8.0	12.0
BT – EDR2 & EDR3	Bluetooth	N/A	8.0	±2.0	6.0	10.0
BT – BLE	Bluetooth	N/A	10.0	±2.0	8.0	12.0

© 2018 RF Exposure Lab, LLC

This report shall not be reproduced except in full without the written approval of RF Exposure Lab, LLC.

SAR Definition [5]

Specific Absorption Rate is defined as the time derivative (rate) of the incremental energy (*dW*) absorbed by (dissipated in) an incremental mass (*dm*) contained in a volume element (*dV*) of a given density (ρ).

$$SAR = \frac{d}{dt}\left(\frac{dW}{dm}\right) = \frac{d}{dt}\left(\frac{dW}{\rho dV}\right)$$

SAR is expressed in units of watts per kilogram (W/kg). *SAR* can be related to the electric field at a point by

$$SAR = \frac{\sigma \mid E \mid^2}{\rho}$$

where:

σ = conductivity of the tissue (S/m)
ρ = mass density of the tissue (kg/m^3)
E = rms electric field strength (V/m)

© 2018 RF Exposure Lab, LLC

This report shall not be reproduced except in full without the written approval of RF Exposure Lab, LLC.

2. SAR Measurement Setup

Robotic System

These measurements are performed using the DASY52 automated dosimetric assessment system. The DASY52 is made by Schmid & Partner Engineering AG (SPEAG) in Zurich, Switzerland and consists of high precision robotics system (Staubli), robot controller, Intel Core2 computer, near-field probe, probe alignment sensor, and the generic twin phantom containing the brain equivalent material. The robot is a six-axis industrial robot performing precise movements to position the probe to the location (points) of maximum electromagnetic field (EMF) (see Fig. 2.1).

System Hardware

A cell controller system contains the power supply, robot controller teach pendant (Joystick), and a remote control used to drive the robot motors. The PC consists of the HP Intel Core2 computer with Windows XP system and SAR Measurement Software DASY52, A/D interface card, monitor, mouse, and keyboard. The Staubli Robot is connected to the cell controller to allow software manipulation of the robot. A data acquisition electronic (DAE) circuit that performs the signal amplification, signal multiplexing, AD-conversion, offset measurements, mechanical surface detection, collision detection, etc. is connected to the Electro-optical coupler (EOC). The EOC performs the conversion from the optical into digital electric signal of the DAE and transfers data to the PC plug-in card.

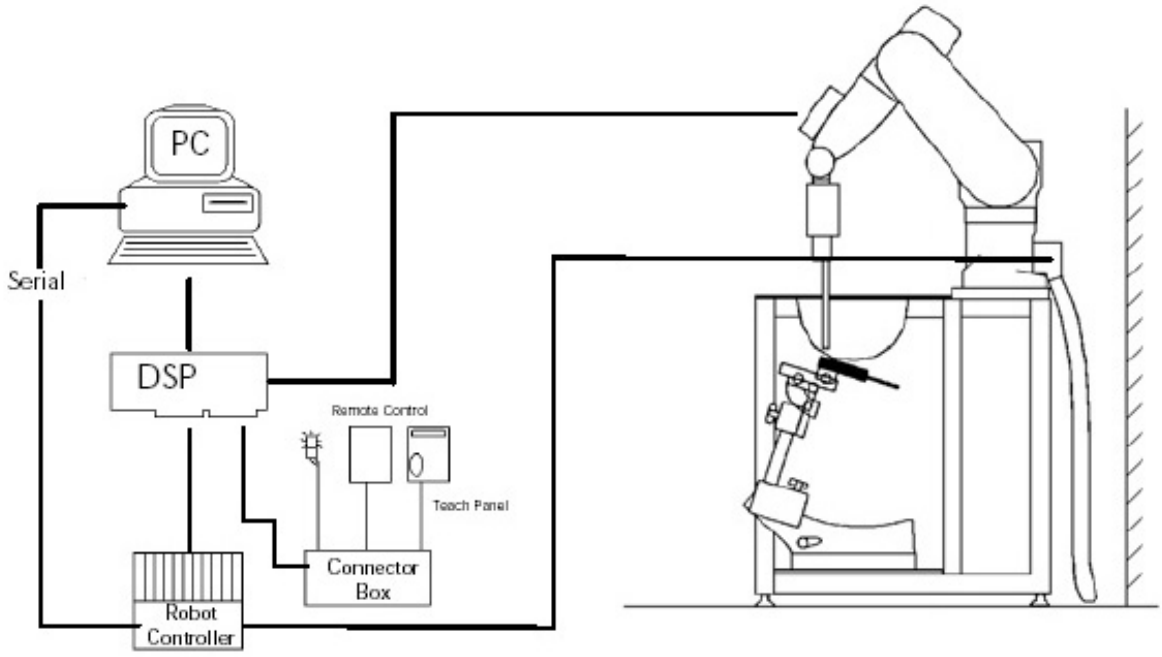

Figure 2.1 SAR Measurement System Setup

This report shall not be reproduced except in full without the written approval of RF Exposure Lab, LLC.

System Electronics

The DAE4 consists of a highly sensitive electrometer-grade preamplifier with auto-zeroing, a channel and gain-switching multiplexer, a fast 16 bit AD-converter and a command decoder and control logic unit. Transmission to the PC-card is accomplished through an optical downlink for data and status information and an optical uplink for commands and clock lines. The mechanical probe mounting device includes two different sensor systems for frontal and sidewise probe contacts. They are also used for mechanical surface detection and probe collision detection. The robot uses its own controller with a built in VME-bus computer. The system is described in detail in.

Probe Measurement System

The SAR measurements were conducted with the dosimetric probe EX3DV4, designed in the classical triangular configuration (see Fig. 2.2) and optimized for dosimetric evaluation. The probe is constructed using the thick film technique; with printed resistive lines on ceramic substrates. The probe is equipped with an optical multi fiber line ending at the front of the probe tip. (see Fig. 2.3) It is connected to the EOC box on the robot arm and provides an automatic detection of the phantom surface. Half of the fibers are connected to a pulsed infrared transmitter, the other half to a synchronized receiver. As the probe approaches the surface, the reflection from the surface produces a coupling from the transmitting to the receiving fibers. This reflection increases first during the approach, reaches maximum and then decreases. If the probe is flatly touching the surface, the coupling is zero. The distance of the coupling maximum to the surface is independent of the surface reflectivity and largely independent of the surface to probe angle. The DASY52 software reads the reflection during a software approach and looks for the maximum using a 2nd order fitting. The approach is stopped at reaching the maximum.

DAE System

This report shall not be reproduced except in full without the written approval of RF Exposure Lab, LLC.

Probe Specifications

Calibration: In air from 10 MHz to 6.0 GHz
In brain and muscle simulating tissue at Frequencies of 450 MHz, 835 MHz, 1750 MHz, 1900 MHz, 2450 MHz, 2600 MHz, 3500 MHz, 5200 MHz, 5300 MHz, 5600 MHz, 5800 MHz

Frequency: 10 MHz to 6 GHz

Linearity: ±0.2dB (30 MHz to 6 GHz)

Dynamic: 10 mW/kg to 100 W/kg

Range: Linearity: ±0.2dB

Dimensions: Overall length: 330 mm

Tip length: 20 mm

Body diameter: 12 mm

Tip diameter: 2.5 mm

Distance from probe tip to sensor center: 1 mm

Application: SAR Dosimetry Testing
Compliance tests of wireless device

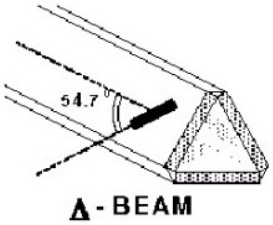

Figure 2.2 Triangular Probe Configurations

Figure 2.3 Probe Thick-Film Technique

This report shall not be reproduced except in full without the written approval of RF Exposure Lab, LLC.

Probe Calibration Process

Dosimetric Assessment Procedure

Each probe is calibrated according to a dosimetric assessment procedure described in with accuracy better than +/- 10%. The spherical isotropy was evaluated with the procedure described in and found to be better than +/-0.25dB. The sensitivity parameters (Norm X, Norm Y, Norm Z), the diode compression parameter (DCP) and the conversion factor (Conv F) of the probe is tested.

Free Space Assessment

The free space E-field from amplified probe outputs is determined in a test chamber. This is performed in a TEM cell for frequencies below 1 GHz, and in a waveguide above 1GHz for free space. For the free space calibration, the probe is placed in the volumetric center of the cavity at the proper orientation with the field. The probe is then rotated 360 degrees until the three channels show the maximum reading. The power density readings equates to 1 mW/cm^2.

Temperature Assessment *

E-field temperature correlation calibration is performed in a flat phantom filled with the appropriate simulated brain tissue. The measured free space E-field in the medium, correlates to temperature rise in a dielectric medium. For temperature correlation calibration a RF transparent thermistor based temperature probe is used in conjunction with the E-field probe

$$SAR = C\frac{\Delta T}{\Delta t}$$

where:

Δt = exposure time (30 seconds),

C = heat capacity of tissue (brain or muscle),

ΔT = temperature increase due to RF exposure.

$$SAR = \frac{|E|^2 \cdot \sigma}{\rho}$$

where:

σ = simulated tissue conductivity,

ρ = Tissue density (1.25 g/cm^3 for brain tissue)

SAR is proportional to ΔT / Δt , the initial rate of tissue heating, before thermal diffusion takes place.
Now it's possible to quantify the electric field in the simulated tissue by equating the thermally derived SAR to the E- field;

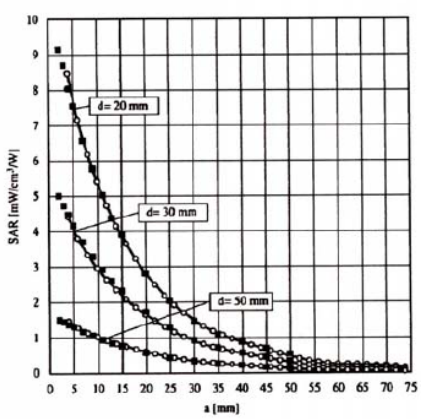

Figure 2.4 E-Field and Temperature Measurements at 900MHz

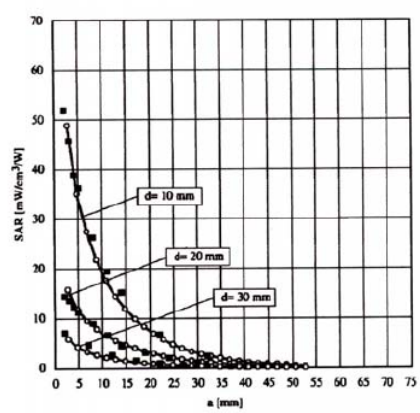

Figure 2.5 E-Field and Temperature Measurements at 1800MHz

This report shall not be reproduced except in full without the written approval of RF Exposure Lab, LLC.

Data Extrapolation

The DASY52 software automatically executes the following procedures to calculate the field units from the microvolt readings at the probe connector. The first step of the evaluation is a linearization of the filtered input signal to account for the compression characteristics of the detector diode. The compensation depends on the input signal, the diode type and the DC-transmission factor from the diode to the evaluation electronics. If the exciting field is pulsed, the crest factor of the signal must be known to correctly compensate for peak power. The formula for each channel can be given like below;

$$V_i = U_i + U_i^2 \cdot \frac{cf}{dcp_i}$$

with
V_i = compensated signal of channel i (i=x,y,z)
U_i = input signal of channel i (i=x,y,z)
cf = crest factor of exciting field (DASY parameter)
dcp_i = diode compression point (DASY parameter)

From the compensated input signals the primary field data for each channel can be evaluated:

E-field probes:

$$E_i = \sqrt{\frac{V_i}{Norm_i \cdot ConvF}}$$

with
V_i = compensated signal of channel i (i = x,y,z)
$Norm_i$ = sensor sensitivity of channel i (i = x,y,z) $\mu V/(V/m)^2$ for E-field probes
ConvF = sensitivity of enhancement in solution
E_i = electric field strength of channel i in V/m

The RSS value of the field components gives the total field strength (Hermetian magnitude):

$$E_{tot} = \sqrt{E_x^2 + E_y^2 + E_z^2}$$

The primary field data are used to calculate the derived field units.

$$SAR = E_{tot}^2 \cdot \frac{\sigma}{\rho \cdot 1000}$$

with
SAR = local specific absorption rate in W/g
E_{tot} = total field strength in V/m
σ = conductivity in [mho/m] or [Siemens/m]
ρ = equivalent tissue density in g/cm^3

The power flow density is calculated assuming the excitation field to be a free space field.

$$P_{pwe} = \frac{E_{tot}^2}{3770}$$

with
P_{pwe} = equivalent power density of a plane wave in W/cm^2
E_{tot} = total electric field strength in V/m

This report shall not be reproduced except in full without the written approval of RF Exposure Lab, LLC.

Scanning procedure

- The DASY installation includes predefined files with recommended procedures for measurements and system check. They are read-only document files and destined as fully defined but unmeasured masks. All test positions (head or body-worn) are tested with the same configuration of test steps differing only in the grid definition for the different test positions.

- The „reference“ and „drift“ measurements are located at the beginning and end of the batch process. They measure the field drift at one single point in the liquid over the complete procedure. The indicated drift is mainly the variation of the DUT’s output power and should vary max. +/- 5 %.

- The highest integrated SAR value is the main concern in compliance test applications. These values can mostly be found at the inner surface of the phantom and cannot be measured directly due to the sensor offset in the probe. To extrapolate the surface values, the measurement distances to the surface must be known accurately. A distance error of 0.5mm could produce SAR errors of 6% at 1800 MHz. Using predefined locations for measurements is not accurate enough. Any shift of the phantom (e.g., slight deformations after filling it with liquid) would produce high uncertainties. For an automatic and accurate detection of the phantom surface, the DASY5 system uses the mechanical surface detection. The detection is always at touch, but the probe will move backward from the surface the indicated distance before starting the measurement.

- The „area scan“ measures the SAR above the DUT or verification dipole on a parallel plane to the surface. It is used to locate the approximate location of the peak SAR with 2D spline interpolation. The robot performs a stepped movement along one grid axis while the local electrical field strength is measured by the probe. The probe is touching the surface of the SAM during acquisition of measurement values. The scan uses different grid spacings for different frequency measurements. Standard grid spacing for head measurements in frequency ranges ≤ 2GHz is 15 mm in x - and y- dimension. For higher frequencies a finer resolution is needed, thus for the grid spacing is reduced according the following table:

Area scan grid spacing for different frequency ranges	
Frequency range	Grid spacing
≤ 2 GHz	≤ 15 mm
2 – 4 GHz	≤ 12 mm
4 – 6 GHz	≤ 10 mm

Grid spacing and orientation have no influence on the SAR result. For special applications where the standard scan method does not find the peak SAR within the grid, e.g. mobile phones with flip cover, the grid can be adapted in orientation. Results of this coarse scan are shown in annex B.

This report shall not be reproduced except in full without the written approval of RF Exposure Lab, LLC.

- A „zoom scan" measures the field in a volume around the 2D peak SAR value acquired in the previous „coarse" scan. It uses a fine meshed grid where the robot moves the probe in steps along all the 3 axis (x,y and z-axis) starting at the bottom of the Phantom. The grid spacing for the cube measurement is varied according to the measured frequency range, the dimensions are given in the following table:

Zoom scan grid spacing and volume for different frequency ranges			
Frequency range	Grid spacing for x, y axis	Grid spacing for z axis	Minimum zoom scan volume
≤ 2 GHz	≤ 8 mm	≤ 5 mm	≥ 30 mm
2 – 3 GHz	≤ 5 mm	≤ 5 mm	≥ 28 mm
3 – 4 GHz	≤ 5 mm	≤ 4 mm	≥ 28 mm
4 – 5 GHz	≤ 4 mm	≤ 3 mm	≥ 25 mm
5 – 6 GHz	≤ 4 mm	≤ 2 mm	≥ 22 mm

DASY is also able to perform repeated zoom scans if more than 1 peak is found during area scan. In this document, the evaluated peak 1g and 10g averaged SAR values are shown in the 2D-graphics in annex B. Test results relevant for the specified standard (see section 3) are shown in table form in section 7.

This report shall not be reproduced except in full without the written approval of RF Exposure Lab, LLC.

Spatial Peak SAR Evaluation

The spatial peak SAR - value for 1 and 10 g is evaluated after the Cube measurements have been done. The basis of the evaluation are the SAR values measured at the points of the fine cube grid consisting of all points in the three directions x, y and z. The algorithm that finds the maximal averaged volume is separated into three different stages.

- The data between the dipole center of the probe and the surface of the phantom are extrapolated. This data cannot be measured since the center of the dipole is 1 to 2.7 mm away from the tip of the probe and the distance between the surface and the lowest measuring point is about 1 mm (see probe calibration sheet). The extrapolated data from a cube measurement can be visualized by selecting 'Graph Evaluated'.

- The maximum interpolated value is searched with a straight-forward algorithm. Around this maximum the SAR - values averaged over the spatial volumes (1g or 10 g) are computed using the 3d-spline interpolation algorithm. If the volume cannot be evaluated (i.e., if a part of the grid was cut off by the boundary of the measurement area) the evaluation will be started on the corners of the bottom plane of the cube.

- All neighboring volumes are evaluated until no neighboring volume with a higher average value is found.

Extrapolation

The extrapolation is based on a least square algorithm [W. Gander, Computermathematik, p.168-180]. Through the points in the first 3 cm along the z-axis, polynomials of order four are calculated. These polynomials are then used to evaluate the points between the surface and the probe tip. The points, calculated from the surface, have a distance of 1 mm from each other.

Interpolation

The interpolation of the points is done with a 3d-Spline. The 3d-Spline is composed of three one-dimensional splines with the "Not a knot"-condition [W. Gander, Computermathematik, p.141-150] (x, y and z -direction) [Numerical Recipes in C, Second Edition, p.123ff].

Volume Averaging

At First the size of the cube is calculated. Then the volume is integrated with the trapezoidal algorithm. 8000 points (20x20x20) are interpolated to calculate the average.

Advanced Extrapolation

DASY uses the advanced extrapolation option which is able to compensate boundary effects on E-field probes.

© 2018 RF Exposure Lab, LLC

This report shall not be reproduced except in full without the written approval of RF Exposure Lab, LLC.

SAM PHANTOM

The SAM Twin Phantom V4.0 is constructed of a fiberglass shell integrated in a wooden table. The shape of the shell is based on data from an anatomical study designed to determine the maximum exposure in at least 90% of all users. It enables the dosimetric evaluation of left and right hand phone usage as well as body mounted usage at the flat phantom region. A cover prevents the evaporation of the liquid. Reference markings on the Phantom allow the complete setup of all predefined phantom positions and measurement grids by manually teaching three points in the robot. (see Fig. 2.6)

Phantom Specification

Phantom: SAM Twin Phantom (V4.0)
Shell Material: Vivac Composite
Thickness: 2.0 ± 0.2 mm

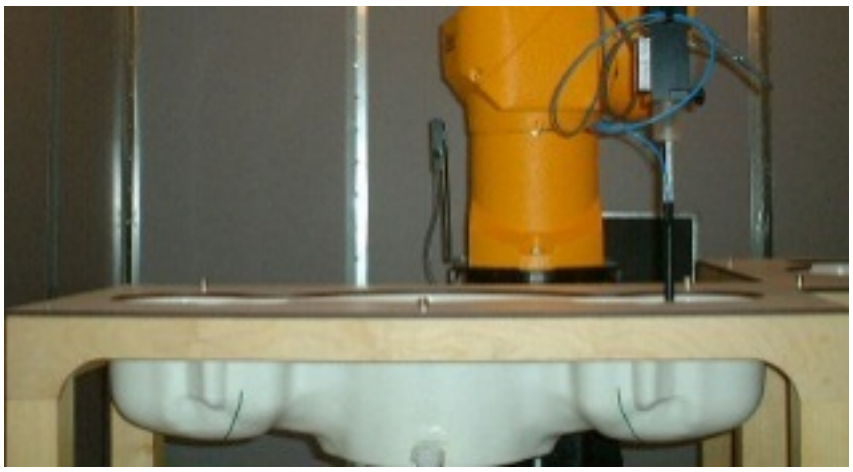

Figure 2.6 SAM Twin Phantom

Device Holder for Transmitters

In combination with the SAM Twin Phantom V4.0 the Mounting Device (see Fig. 2.7), enables the rotation of the mounted transmitter in spherical coordinates whereby the rotation point is the ear opening. The devices can be easily, accurately, and repeat ably be positioned according to the FCC, CENELEC, IEC and IEEE specifications. The device holder can be locked at different phantom locations (left head, right head, flat phantom).

Figure 2.7 Mounting Device

Note: A simulating human hand is not used due to the complex anatomical and geometrical structure of the hand that may produce infinite number of configurations. To produce the worst-case condition (the hand absorbs antenna output power), the hand is omitted during the tests.

This report shall not be reproduced except in full without the written approval of RF Exposure Lab, LLC.

3. Probe and Dipole Calibration

See Appendix D and E.

This report shall not be reproduced except in full without the written approval of RF Exposure Lab, LLC.

4. Phantom & Simulating Tissue Specifications

Head & Body Simulating Mixture Characterization

The head and body mixtures consist of the material based on the table listed below. The mixture is calibrated to obtain proper dielectric constant (permittivity) and conductivity of the desired tissue. Body tissue parameters that have not been specified in P1528 are derived from the issue dielectric parameters computed from the 4-Cole-Cole equations.

Table 4.1 Typical Composition of Ingredients for Tissue

Ingredients		Simulating Tissue			
		2450 MHz Body	5250 MHz Body	5600 MHz Body	5785 MHz Body
Mixing Percentage					
Water		73.20	Proprietary Mixture		
Sugar		0.00			
Salt		0.04			
HEC		0.00			
Bactericide		0.00			
DGBE		26.70			
Dielectric Constant	Target	52.70	48.96	48.47	48.25
Conductivity (S/m)	Target	1.95	5.35	5.77	5.96

© 2018 RF Exposure Lab, LLC

This report shall not be reproduced except in full without the written approval of RF Exposure Lab, LLC.

5. ANSI/IEEE C95.1 – 1992 RF Exposure Limits [2]

Uncontrolled Environment

Uncontrolled Environments are defined as locations where there is the exposure of individuals who have no knowledge or control of their exposure. The general population/uncontrolled exposure limits are applicable to situations in which the general public may be exposed or in which persons who are exposed as a consequence of their employment may not be made fully aware of the potential for exposure or cannot exercise control over their exposure. Members of the general public would come under this category when exposure is not employment-related; for example, in the case of a wireless transmitter that exposes persons in its vicinity.

Controlled Environment

Controlled Environments are defined as locations where there is exposure that may be incurred by persons who are aware of the potential for exposure, (i.e. as a result of employment or occupation). In general, occupational/controlled exposure limits are applicable to situations in which persons are exposed as a consequence of their employment, who have been made fully aware of the potential for exposure and can exercise control over their exposure. This exposure category is also applicable when the exposure is of a transient nature due to incidental passage through a location where the exposure levels may be higher than the general population/uncontrolled limits, but the exposed person is fully aware of the potential for exposure and can exercise control over his or her exposure by leaving the area or by some other appropriate means.

Table 5.1 Human Exposure Limits

	UNCONTROLLED ENVIRONMENT General Population (W/kg) or (mW/g)	CONTROLLED ENVIROMENT Professional Population (W/kg) or (mW/g)
SPATIAL PEAK SAR[1] Head	1.60	8.00
SPATIAL AVERAGE SAR[2] Whole Body	0.08	0.40
SPATIAL PEAK SAR[3] Hands, Feet, Ankles, Wrists	4.00	20.00

[1] The Spatial Peak value of the SAR averaged over any 1 gram of tissue (defined as a tissue volume in the shape of a cube) and over the appropriate averaging time.
[2] The Spatial Average value of the SAR averaged over the whole body.
[3] The Spatial Peak value of the SAR averaged over any 10 grams of tissue (defined as a tissue volume in the shape of a cube) and over the appropriate averaging time.

© 2018 RF Exposure Lab, LLC

This report shall not be reproduced except in full without the written approval of RF Exposure Lab, LLC.

6. Measurement Uncertainty

Measurement uncertainty table is not required per KDB 865664 D01 v01r04 section 2.8.2 page 12. SAR measurement uncertainty analysis is required in the SAR report only when the highest measured SAR in a frequency band is ≥ 1.5 W/kg for 1-g SAR. The equivalent ratio (1.5/1.6) should be applied to extremity and occupational exposure conditions. The highest reported value is less than 1.5 W/kg. Therefore, the measurement uncertainty table is not required.

© 2018 RF Exposure Lab, LLC

This report shall not be reproduced except in full without the written approval of RF Exposure Lab, LLC.

7. System Validation

Tissue Verification

Table 7.1 Measured Tissue Parameters

		2450 MHz Body		5200 MHz Body	
Date(s)		Jun. 21, 2018		Jun. 20, 2018	
Liquid Temperature (˚C)	20.0	Target	Measured	Target	Measured
Dielectric Constant: ε		52.70	52.58	49.01	48.94
Conductivity: σ		1.95	2.00	5.30	5.34
		5600 MHz Body		5800 MHz Body	
Date(s)		Jun. 20, 2018		Jun. 20, 2018	
Liquid Temperature (˚C)	20.0	Target	Measured	Target	Measured
Dielectric Constant: ε		48.47	48.36	48.20	48.05
Conductivity: σ		5.77	5.80	6.00	6.04

See Appendix A for data printout.

Test System Verification

Prior to assessment, the system is verified to the ±10% of the specifications at the test frequency by using the system kit. Power is normalized to 1 watt. (Graphic Plots Attached)

Table 7.2 System Dipole Validation Target & Measured

	Test Frequency	Targeted SAR_{1g} (W/kg)	Measure SAR_{1g} (W/kg)	Tissue Used for Verification	Deviation Target and Fast SAR to SAR (%)	Plot Number
21-Jun-2018	2450 MHz	52.10	52.00	Body	- 0.19	1
20-Jun-2018	5200 MHz	77.40	78.10	Body	+ 0.90	2
20-Jun-2018	5600 MHz	80.70	79.90	Body	- 0.99	3
20-Jun-2018	5800 MHz	78.80	77.90	Body	- 1.14	4

See Appendix A for data plots.

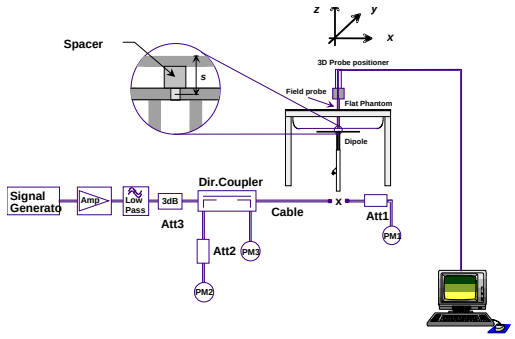

Figure 7.1 Dipole Validation Test Setup

This report shall not be reproduced except in full without the written approval of RF Exposure Lab, LLC.

8. SAR Test Data Summary

See Measurement Result Data Pages

See Appendix B for SAR Test Data Plots.
See Appendix C for SAR Test Setup Photos.

Procedures Used To Establish Test Signal

The device was either placed into simulated transmit mode using the manufacturer's test codes or the actual transmission is activated through a base station simulator or similar equipment. See data pages for actual procedure used in measurement.

Device Test Condition

In order to verify that the device was tested at full power, conducted output power measurements were performed before and after each SAR measurement to confirm the output power unless otherwise noted. If a conducted power deviation of more than 5% occurred, the test was repeated. The power drift of each test is measured at the start of the test and again at the end of the test. The drift percentage is calculated by the formula ((end/start)-1)*100 and rounded to three decimal places. The drift percentage is calculated into the resultant SAR value on the data sheet for each test.

The device was tested on the Side A and Side B of the device without the belt clip holder. The belt clip is made of all plastic and the measured position is the most conservative.

The data rates used when evaluating the WiFi transmitter were the lowest data rates for each mode. The device was operating at its maximum output power at the lowest data rate for all measurements.

Bluetooth operation was not evaluated for stand-alone SAR as the power is below the exclusion level. The Bluetooth transmitter does not simultaneously transmit with the WiFi transmitter.

RFID operation was not evaluated as the power level of the RFID was 19µW which is excluded per KDB 447498 D01 v05r01 section 4.3.1 1) page 11. The RFID transmitter does simultaneously transmit with the WiFi or BT transmitter. The simultaneous transmission is evaluated on page 27.

The antenna was tested on two sides of the device. During each test, the device was on a minimum of 10 cm of Styrofoam during the test. The following is a pictorial drawing of the locations.

© 2018 RF Exposure Lab, LLC

This report shall not be reproduced except in full without the written approval of RF Exposure Lab, LLC.

SAR Location Diagram

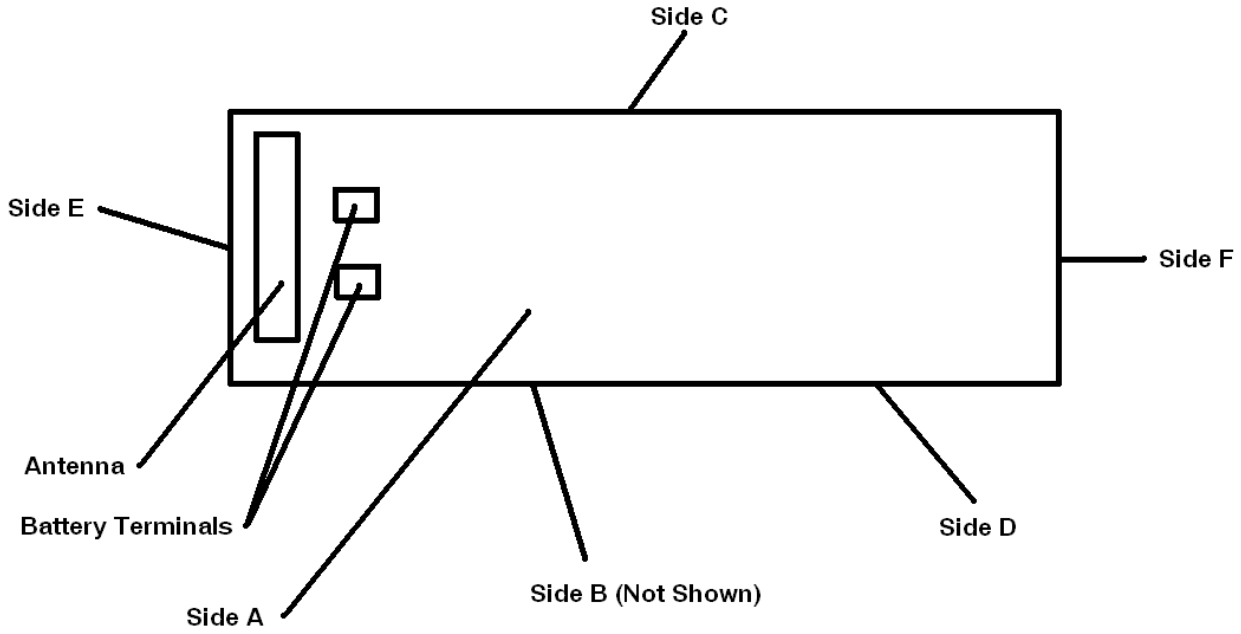

This report shall not be reproduced except in full without the written approval of RF Exposure Lab, LLC.

Band	Mode	Bandwidth (MHz)	Channel	Frequency (MHz)	Data Rate	Antenna	Avg Power (dBm)	Tune-up Pwr (dBm)
2450 MHz	802.11b	20	1	2412	1 Mbps	Chain A	18.25	19.50
			6	2437			18.34	19.50
			11	2462			18.30	19.50
	802.11g	20	1	2412	6 Mbps	Chain A	17.12	17.50
			6	2437			17.25	17.50
			11	2462			17.19	17.50
	802.11n	20	1	2412	HT0	Chain A	17.28	17.50
			6	2437			17.22	17.50
			11	2462			17.26	17.50
	802.11n	40	3	2422	HT0	Chain A	17.37	17.50
			6	2437			17.39	17.50
			9	2452			17.30	17.50
5.15-5.25 GHz	802.11a	20	38	5190	6 Mbps	Chain A	17.31	17.50
			40	5200			17.36	17.50
			44	5220			17.40	17.50
			46	5230			17.35	17.50
	802.11n	20	38	5190	HT0	Chain A	17.22	17.50
			40	5200			17.26	17.50
			44	5220			17.21	17.50
			46	5230			17.24	17.50
	802.11n	40	38	5190	HT0	Chain A	17.22	17.50
			46	5230			17.26	17.50
	802.11ac	80	42	5210	VHT0	Chain A	17.23	17.50
5.25-5.35 GHz	802.11a	20	54	5270	6 Mbps	Chain A	17.39	17.50
			56	5280			17.43	17.50
			60	5300			17.45	17.50
			63	5315			17.32	17.50
	802.11n	20	54	5270	HT0	Chain A	17.11	17.50
			56	5280			17.15	17.50
			60	5300			17.13	17.50
			62	5310			17.14	17.50
	802.11n	40	54	5270	HT0	Chain A	17.10	17.50
			60	5300			17.09	17.50
	802.11ac	80	58	5290	VHT0	Chain A	17.08	17.50

Band	Mode	Bandwidth (MHz)	Channel	Frequency (MHz)	Data Rate	Antenna	Avg Power (dBm)	Tune-up Pwr (dBm)
5600 MHz	802.11a	20	102	5510	6 Mbps	Chain A	17.26	17.50
			104	5520			17.30	17.50
			108	5540			17.22	17.50
			112	5560			17.21	17.50
			116	5580			17.35	17.50
			120	5600			17.20	17.50
			124	5620			17.39	17.50
			128	5640			17.16	17.50
			132	5660			17.12	17.50
			136	5680			17.32	17.50
			138	5690			17.11	17.50
	802.11n	20	102	5510	HT0	Chain A	17.15	17.50
			104	5520			17.09	17.50
			108	5540			17.02	17.50
			112	5560			17.06	17.50
			116	5580			17.01	17.50
			120	5600			16.98	17.50
			124	5620			16.97	17.50
			128	5640			16.92	17.50
			132	5660			16.88	17.50
			136	5680			16.95	17.50
			138	5690			16.99	17.50
	802.11n	40	104	5520	HT0	Chain A	16.58	17.50
			110	5550			16.69	17.50
			118	5580			16.57	17.50
			126	5610			16.53	17.50
			132	5660			16.60	17.50
	802.11ac	80	106	5530	VHT0	Chain A	16.62	17.50
			122	5610			16.64	17.50
			138	5690			16.66	17.50

© 2018 RF Exposure Lab, LLC

This report shall not be reproduced except in full without the written approval of RF Exposure Lab, LLC.

Band	Mode	Bandwidth (MHz)	Channel	Frequency (MHz)	Data Rate	Antenna	Avg Power (dBm)	Tune-up Pwr (dBm)
5800 MHz	802.11a	20	149	5745	6 Mbps	Chain A	17.25	17.50
			153	5765			17.16	17.50
			157	5785			17.36	17.50
			161	5805			17.23	17.50
			165	5825			17.31	17.50
	802.11n	20	150	5750	HT0	Chain A	16.87	17.50
			153	5765			16.85	17.50
			157	5785			16.89	17.50
			161	5805			16.82	17.50
			164	5820			16.84	17.50
	802.11n	40	152	5760	HT0	Chain A	16.77	17.50
			159	5795			16.76	17.50
	802.11ac	80	155	5775	VHT0	Chain A	16.72	17.50

Band	Mode	Channel	Frequency (MHz)	Data Rate	Antenna	Avg Power (dBm)	Tune-up Pwr (dBm)
2450 MHz	Bluetooth v4.0	0	2402	Basic Rate GFSK	Chain B	11.23	12.00
		39	2441			11.26	12.00
		78	2480			11.21	12.00
		0	2402	EDR π/4 DQPSK		9.57	10.00
		39	2441			9.59	10.00
		78	2480			9.52	10.00
		0	2402	EDR 8-DPSK		9.53	10.00
		39	2441			9.55	10.00
		78	2480			9.51	10.00
		0	2402	Low Energy GFSK		11.69	12.00
		39	2441			11.72	12.00
		78	2480			11.65	12.00

© 2018 RF Exposure Lab, LLC

This report shall not be reproduced except in full without the written approval of RF Exposure Lab, LLC.

Figure 8.1 Test Reduction Table – 2.4 GHz

Mode	Side	Required Channel	Tested/Reduced
802.11b	Side A	1 – 2412 MHz	Reduced[1]
		6 – 2437 MHz	Tested
		11 – 2462 MHz	Reduced[1]
	Side B	1 – 2412 MHz	Reduced[1]
		6 – 2437 MHz	Tested
		11 – 2462 MHz	Reduced[1]
	All Other Sides	1 – 2412 MHz	Reduced[4]
		6 – 2437 MHz	Reduced[4]
		11 – 2462 MHz	Reduced[4]
802.11g	Side A	1 – 2412 MHz	Reduced[3]
		6 – 2437 MHz	Reduced[3]
		11 – 2462 MHz	Reduced[3]
	Side B	1 – 2412 MHz	Reduced[3]
		6 – 2437 MHz	Reduced[3]
		11 – 2462 MHz	Reduced[3]
	All Other Sides	1 – 2412 MHz	Reduced[3]
		6 – 2437 MHz	Reduced[3]
		11 – 2462 MHz	Reduced[3]
802.11n	Side A	1 – 2412 MHz	Reduced[3]
		6 – 2437 MHz	Reduced[3]
		11 – 2462 MHz	Reduced[3]
	Side B	1 – 2412 MHz	Reduced[3]
		6 – 2437 MHz	Reduced[3]
		11 – 2462 MHz	Reduced[3]
	All Other Sides	1 – 2412 MHz	Reduced[4]
		6 – 2437 MHz	Reduced[4]
		11 – 2462 MHz	Reduced[4]

Reductions are the same for all three models and both battery types.

Reduced[1] – When the reported SAR is ≤ 0.4 W/kg, SAR is not required for the remaining test configuration per KDB 248227 D01 v02r02 section 5.1.1 1) page 9.

Reduced[2] – When the reported SAR is >0.8 W/kg, test the next highest configuration until the SAR value is ≤ 1.2 W/kg per KDB 248227 D01 v02r02 section 5.1.1 3) page 9.

Reduced[3] – When the highest reported SAR for DSSS is adjusted by the ratio of OFDM to DSSS specified maximum output power and the adjusted SAR is ≤ 1.2 W/kg, SAR is not required per KDB 248227 D01 v02r02 section 5.2.2 2) page 10.

Reduced[4] – All other sides are not tested as they are not normal operation next to the body.

© 2018 RF Exposure Lab, LLC

This report shall not be reproduced except in full without the written approval of RF Exposure Lab, LLC.

Figure 8.2 Test Reduction Table – 5.1 GHz

Mode	Side	Required Channel	Tested/Reduced
802.11a 5150 MHz	Side A	36 – 5180 MHz	Reduced[1]
		40 – 5200 MHz	Reduced[1]
		44 – 5220 MHz	Reduced[1]
		48 – 5240 MHz	Reduced[1]
	Side B	36 – 5180 MHz	Reduced[1]
		40 – 5200 MHz	Reduced[1]
		44 – 5220 MHz	Reduced[1]
		48 – 5240 MHz	Reduced[1]
	All Other Sides	36 – 5180 MHz	Reduced[2]
		40 – 5200 MHz	Reduced[2]
		44 – 5220 MHz	Reduced[2]
		48 – 5240 MHz	Reduced[2]
802.11n 5150 MHz	Side A	36 – 5180 MHz	Reduced[1]
		40 – 5200 MHz	Reduced[1]
		44 – 5220 MHz	Reduced[1]
		48 – 5240 MHz	Reduced[1]
	Side B	36 – 5180 MHz	Reduced[1]
		40 – 5200 MHz	Reduced[1]
		44 – 5220 MHz	Reduced[1]
		48 – 5240 MHz	Reduced[1]
	All Other Sides	36 – 5180 MHz	Reduced[2]
		40 – 5200 MHz	Reduced[2]
		44 – 5220 MHz	Reduced[2]
		48 – 5240 MHz	Reduced[2]
802.11ac 5210 MHz	Side A	42 – 5210 MHz	Reduced[1]
	Side B	42 – 5210 MHz	Reduced[1]
	All Other Sides	42 – 5210 MHz	Reduced[2]

Reductions are the same for all three models and both battery types.
Reduced[1] – When the adjusted SAR is ≤ 1.2 W/kg, SAR is not required for the UNII-1 with the same or lower maximum output power in that test configuration per KDB 248227 D01 v02r02 section 5.3.1 1) page 11.
Reduced[2] – All other sides are not tested as they are not normal operation next to the body.

This report shall not be reproduced except in full without the written approval of RF Exposure Lab, LLC.

Figure 8.3 Test Reduction Table – 5.2 GHz

Mode	Side	Required Channel	Tested/Reduced
802.11a 5150 MHz	Side A	52 – 5260 MHz	Reduced[1]
		56 – 5280 MHz	Reduced[1]
		60 – 5300 MHz	Tested
		64 – 5320 MHz	Reduced[1]
	Side B	52 – 5260 MHz	Reduced[1]
		56 – 5280 MHz	Reduced[1]
		60 – 5300 MHz	Tested
		64 – 5320 MHz	Reduced[1]
	All Other Sides	52 – 5260 MHz	Reduced[2]
		56 – 5280 MHz	Reduced[2]
		60 – 5300 MHz	Reduced[2]
		64 – 5320 MHz	Reduced[2]
802.11n 5150 MHz	Side A	52 – 5260 MHz	Reduced[1]
		56 – 5280 MHz	Reduced[1]
		60 – 5300 MHz	Reduced[1]
		64 – 5320 MHz	Reduced[1]
	Side B	52 – 5260 MHz	Reduced[1]
		56 – 5280 MHz	Reduced[1]
		60 – 5300 MHz	Reduced[1]
		64 – 5320 MHz	Reduced[1]
	All Other Sides	52 – 5260 MHz	Reduced[2]
		56 – 5280 MHz	Reduced[2]
		60 – 5300 MHz	Reduced[2]
		64 – 5320 MHz	Reduced[2]
802.11ac 5210 MHz	Side A	58 – 5290 MHz	Reduced[1]
	Side B	58 – 5290 MHz	Reduced[1]
	All Other Sides	58 – 5290 MHz	Reduced[2]

Reductions are the same for all three models and both battery types.

Reduced[1] – When the reported SAR is ≤ 0.4 W/kg, SAR is not required for the remaining test configuration per KDB 248227 D01 v02r02 section 5.1.1 1) page 9.

Reduced[2] – All other sides are not tested as they are not normal operation next to the body.

Reduced[3] – When the reported SAR is >0.8 W/kg, test the next highest configuration until the SAR value is ≤ 1.2 W/kg per KDB 248227 D01 v02r02 section 5.1.1 3) page 9.

Reduced[4] – When the reported SAR is >0.4 W/kg, test the next highest configuration until the SAR value is ≤ 0.8 W/kg per KDB 248227 D01 v02r02 section 5.1.1 2) page 9.

© 2018 RF Exposure Lab, LLC

This report shall not be reproduced except in full without the written approval of RF Exposure Lab, LLC.

Figure 8.4 Test Reduction Table – 5.6 GHz

Mode	Side	Required Channel	Tested/Reduced
802.11a 5600 MHz	Side A	100 – 5500 MHz	Reduced[4]
		104 – 5520 MHz	Reduced[4]
		108 – 5540 MHz	Reduced[4]
		112 – 5560 MHz	Reduced[4]
		116 – 5580 MHz	Reduced[4]
		120 – 5600 MHz	Reduced[4]
		124 – 5620 MHz	Tested
		128 – 5640 MHz	Reduced[4]
		132 – 5660 MHz	Reduced[4]
		136 – 5680 MHz	Reduced[4]
		140 – 5700 MHz	Reduced[4]
	Side B	100 – 5500 MHz	Reduced[4]
		104 – 5520 MHz	Reduced[4]
		108 – 5540 MHz	Reduced[4]
		112 – 5560 MHz	Reduced[4]
		116 – 5580 MHz	Reduced[4]
		120 – 5600 MHz	Reduced[4]
		124 – 5620 MHz	Tested
		128 – 5640 MHz	Reduced[4]
		132 – 5660 MHz	Reduced[4]
		136 – 5680 MHz	Reduced[4]
		140 – 5700 MHz	Reduced[4]
	All Other Sides	100 – 5500 MHz	Reduced[3]
		104 – 5520 MHz	Reduced[3]
		108 – 5540 MHz	Reduced[3]
		112 – 5560 MHz	Reduced[3]
		116 – 5580 MHz	Reduced[3]
		120 – 5600 MHz	Reduced[3]
		124 – 5620 MHz	Reduced[3]
		128 – 5640 MHz	Reduced[3]
		132 – 5660 MHz	Reduced[3]
		136 – 5680 MHz	Reduced[3]
		140 – 5700 MHz	Reduced[3]

Reductions are the same for all three models and both battery types.

Reduced[1] – When the reported SAR is >0.8 W/kg, test the next highest configuration until the SAR value is ≤ 1.2 W/kg per KDB 248227 D01 v02r02 section 5.1.1 3) page 9.

Reduced[2] – When the reported SAR is >0.4 W/kg, test the next highest configuration until the SAR value is ≤ 0.8 W/kg per KDB 248227 D01 v02r02 section 5.1.1 2) page 9.

Reduced[3] – All other sides are not tested as they are not normal operation next to the body.

Reduced[4] – When the reported SAR is ≤ 0.4 W/kg, SAR is not required for the remaining test configuration per KDB 248227 D01 v02r02 section 5.1.1 1) page 9.

© 2018 RF Exposure Lab, LLC

This report shall not be reproduced except in full without the written approval of RF Exposure Lab, LLC.

Figure 8.5 Test Reduction Table – 5.6 GHz

Mode	Side	Required Channel	Tested/Reduced
802.11n 5600 MHz	Side A	100 – 5500 MHz	Reduced[4]
		104 – 5520 MHz	Reduced[4]
		108 – 5540 MHz	Reduced[4]
		112 – 5560 MHz	Reduced[4]
		116 – 5580 MHz	Reduced[4]
		120 – 5600 MHz	Reduced[4]
		124 – 5620 MHz	Reduced[4]
		128 – 5640 MHz	Reduced[4]
		132 – 5660 MHz	Reduced[4]
		136 – 5680 MHz	Reduced[4]
		140 – 5700 MHz	Reduced[4]
	Side B	100 – 5500 MHz	Reduced[4]
		104 – 5520 MHz	Reduced[4]
		108 – 5540 MHz	Reduced[4]
		112 – 5560 MHz	Reduced[4]
		116 – 5580 MHz	Reduced[4]
		120 – 5600 MHz	Reduced[4]
		124 – 5620 MHz	Reduced[4]
		128 – 5640 MHz	Reduced[4]
		132 – 5660 MHz	Reduced[4]
		136 – 5680 MHz	Reduced[4]
		140 – 5700 MHz	Reduced[4]
	All Other Sides	100 – 5500 MHz	Reduced[3]
		104 – 5520 MHz	Reduced[3]
		108 – 5540 MHz	Reduced[3]
		112 – 5560 MHz	Reduced[3]
		116 – 5580 MHz	Reduced[3]
		120 – 5600 MHz	Reduced[3]
		124 – 5620 MHz	Reduced[3]
		128 – 5640 MHz	Reduced[3]
		132 – 5660 MHz	Reduced[3]
		136 – 5680 MHz	Reduced[3]
		140 – 5700 MHz	Reduced[3]

Reductions are the same for all three models and both battery types.

Reduced[1] – When the reported SAR is >0.8 W/kg, test the next highest configuration until the SAR value is ≤ 1.2 W/kg per KDB 248227 D01 v02r02 section 5.1.1 3) page 9.

Reduced[2] – When the reported SAR is >0.4 W/kg, test the next highest configuration until the SAR value is ≤ 0.8 W/kg per KDB 248227 D01 v02r02 section 5.1.1 2) page 9.

Reduced[3] – All other sides are not tested as they are not normal operation next to the body.

Reduced[4] – When the reported SAR is ≤ 0.4 W/kg, SAR is not required for the remaining test configuration per KDB 248227 D01 v02r02 section 5.1.1 1) page 9.

© 2018 RF Exposure Lab, LLC

This report shall not be reproduced except in full without the written approval of RF Exposure Lab, LLC.

Figure 8.6 Test Reduction Table – 5.6 GHz

Mode	Side	Required Channel	Tested/Reduced
802.11ac 5600 MHz	Side A	106 – 5530 MHz	Reduced[4]
		122 – 5610 MHz	Reduced[4]
		138 – 5690 MHz	Reduced[4]
	Side B	106 – 5530 MHz	Reduced[4]
		122 – 5610 MHz	Reduced[4]
		138 – 5690 MHz	Reduced[4]
	All Other Sides	106 – 5530 MHz	Reduced[3]
		122 – 5610 MHz	Reduced[3]
		138 – 5690 MHz	Reduced[3]

Reductions are the same for all three models and both battery types.

Reduced[1] – When the reported SAR is >0.8 W/kg, test the next highest configuration until the SAR value is ≤ 1.2 W/kg per KDB 248227 D01 v02r02 section 5.1.1 3) page 9.

Reduced[2] – When the reported SAR is >0.4 W/kg, test the next highest configuration until the SAR value is ≤ 0.8 W/kg per KDB 248227 D01 v02r02 section 5.1.1 2) page 9.

Reduced[3] – All other sides are not tested as they are not normal operation next to the body.

Reduced[4] – When the reported SAR is ≤ 0.4 W/kg, SAR is not required for the remaining test configuration per KDB 248227 D01 v02r02 section 5.1.1 1) page 9.

© 2018 RF Exposure Lab, LLC

This report shall not be reproduced except in full without the written approval of RF Exposure Lab, LLC.

Figure 8.7 Test Reduction Table – 5.8 GHz

Mode	Side	Required Channel	Tested/Reduced
802.11a 5800 MHz	Side A	149 – 5745 MHz	Reduced[2]
		153 – 5765 MHz	Reduced[2]
		157 – 5785 MHz	Tested
		161 – 5805 MHz	Reduced[2]
		165 – 5825 MHz	Tested
	Side B	149 – 5745 MHz	Reduced[2]
		153 – 5765 MHz	Reduced[2]
		157 – 5785 MHz	Tested
		161 – 5805 MHz	Reduced[2]
		165 – 5825 MHz	Tested
	All Other Sides	149 – 5745 MHz	Reduced[4]
		153 – 5765 MHz	Reduced[4]
		157 – 5785 MHz	Reduced[4]
		161 – 5805 MHz	Reduced[4]
		165 – 5825 MHz	Reduced[4]
802.11n 5800 MHz	Side A	149 – 5745 MHz	Reduced[2]
		153 – 5765 MHz	Reduced[2]
		157 – 5785 MHz	Reduced[2]
		161 – 5805 MHz	Reduced[2]
		165 – 5825 MHz	Reduced[2]
	Side B	149 – 5745 MHz	Reduced[2]
		153 – 5765 MHz	Reduced[2]
		157 – 5785 MHz	Reduced[2]
		161 – 5805 MHz	Reduced[2]
		165 – 5825 MHz	Reduced[2]
	All Other Sides	149 – 5745 MHz	Reduced[4]
		153 – 5765 MHz	Reduced[4]
		157 – 5785 MHz	Reduced[4]
		161 – 5805 MHz	Reduced[4]
		165 – 5825 MHz	Reduced[4]
802.11ac 5800 MHz	Side A	155 – 5775 MHz	Reduced[1]
	Side B	155 – 5775 MHz	Reduced[3]
	All Other Sides	155 – 5775 MHz	Reduced[4]

Reductions are the same for all three models and both battery types.

Reduced[1] – When the reported SAR is ≤ 0.4 W/kg, SAR is not required for the remaining test configuration per KDB 248227 D01 v02r02 section 5.1.1 1) page 9.

Reduced[2] – When the reported SAR is > 0.4 W/kg, test next highest output power channel until SAR ≤ 0.8 W/kg then all remaining test configurations are not required per KDB 248227 D01 v02r02 section 5.1.1 2) page 9.

Reduced[3] – When the reported SAR is >0.8 W/kg, test the next highest configuration until the SAR value is ≤ 1.2 W/kg per KDB 248227 D01 v02r02 section 5.1.1 3) page 9.

Reduced[4] – All other sides are not tested as they are not normal operation next to the body.

© 2018 RF Exposure Lab, LLC

This report shall not be reproduced except in full without the written approval of RF Exposure Lab, LLC.

SAR Data Summary – 2450 MHz Body 802.11b

MEASUREMENT RESULTS

Gap	Plot	Model	Position	Frequency MHz	Frequency Ch.	Modulation	Battery	End Power (dBm)	Measured SAR (W/kg)	Reported SAR (W/kg)
0 mm	-----	A710X	Side A	2437	6	DSSS	Hi Cap	18.34	0.161	0.21
	-----		Side B	2437	6	DSSS	Hi Cap	18.34	0.168	0.22
	1		Side A	2437	6	DSSS	Standard	18.34	0.173	0.23
	-----		Side B	2437	6	DSSS	Standard	18.34	0.165	0.22
	-----	A720X	Side A	2437	6	DSSS	Hi Cap	18.34	0.213	0.28
	-----		Side B	2437	6	DSSS	Hi Cap	18.34	0.145	0.19
	2		Side A	2437	6	DSSS	Standard	18.34	0.218	0.29
	-----		Side B	2437	6	DSSS	Standard	18.34	0.141	0.18
	3	A730X	Side A	2437	6	DSSS	Hi Cap	18.34	0.157	0.21
	-----		Side B	2437	6	DSSS	Hi Cap	18.34	0.140	0.18
	-----		Side A	2437	6	DSSS	Standard	18.34	0.156	0.20
	-----		Side B	2437	6	DSSS	Standard	18.34	0.137	0.18

Body
1.6 W/kg (mW/g)
averaged over 1 gram

1. Battery is fully charged for all tests.
   Power Measured ☒Conducted ☐ERP ☐EIRP
2. SAR Measurement
   Phantom Configuration ☐Left Head ☒Eli4 ☐Right Head
   SAR Configuration ☐Head ☒Body
3. Test Signal Call Mode ☒Test Code ☐Base Station Simulator
4. Test Configuration ☐With Belt Clip ☐Without Belt Clip ☒N/A
5. Tissue Depth is at least 15.0 cm

Jay M. Moulton
Vice President

This report shall not be reproduced except in full without the written approval of RF Exposure Lab, LLC.

SAR Data Summary – 5250 MHz Body 802.11a

MEASUREMENT RESULTS										
Gap	Plot	Model	Position	Frequency		Modulation	Battery	End Power	Measured SAR (W/kg)	Reported SAR (W/kg)
				MHz	Ch.			(dBm)		
0 mm	-----	A710X	Side A	5300	60	OFDM	Hi Cap	17.45	0.103	0.10
	4		Side B	5300	60	OFDM	Hi Cap	17.45	0.106	0.11
	-----		Side A	5300	60	OFDM	Standard	17.45	0.102	0.10
	-----		Side B	5300	60	OFDM	Standard	17.45	0.101	0.10
	-----	A720X	Side A	5300	60	OFDM	Hi Cap	17.45	0.102	0.10
	-----		Side B	5300	60	OFDM	Hi Cap	17.45	0.125	0.13
	-----		Side A	5300	60	OFDM	Standard	17.45	0.131	0.13
	5		Side B	5300	60	OFDM	Standard	17.45	0.141	0.14
	-----	A730X	Side A	5300	60	OFDM	Hi Cap	17.45	0.102	0.10
	6		Side B	5300	60	OFDM	Hi Cap	17.45	0.159	0.16
	-----		Side A	5300	60	OFDM	Standard	17.45	0.101	0.10
	-----		Side B	5300	60	OFDM	Standard	17.45	0.153	0.15

Body
1.6 W/kg (mW/g)
averaged over 1 gram

1. Battery is fully charged for all tests.
   Power Measured ☒Conducted ☐ERP ☐EIRP
2. SAR Measurement
   Phantom Configuration ☐Left Head ☒ Eli4 ☐Right Head
   SAR Configuration ☐Head ☒Body
3. Test Signal Call Mode ☒Test Code ☐Base Station Simulator
4. Test Configuration ☐With Belt Clip ☐Without Belt Clip ☒N/A
5. Tissue Depth is at least 15.0 cm

Jay M. Moulton
Vice President

© 2018 RF Exposure Lab, LLC

This report shall not be reproduced except in full without the written approval of RF Exposure Lab, LLC.

SAR Data Summary – 5600 MHz Body 802.11a

MEASUREMENT RESULTS										
Gap	Plot	Model	Position	Frequency		Modulation	Battery	End Power	Measured SAR (W/kg)	Reported SAR (W/kg)
				MHz	Ch.			(dBm)		
0 mm	-----	A710X	Side A	5620	124	OFDM	Hi Cap	17.39	0.154	0.16
	-----		Side B	5620	124	OFDM	Hi Cap	17.39	0.304	0.31
	-----		Side A	5620	124	OFDM	Standard	17.39	0.180	0.19
	7		Side B	5620	124	OFDM	Standard	17.39	0.336	0.35
	-----	A720X	Side A	5620	124	OFDM	Hi Cap	17.39	0.179	0.18
	-----		Side B	5620	124	OFDM	Hi Cap	17.39	0.298	0.31
	-----		Side A	5620	124	OFDM	Standard	17.39	0.124	0.13
	8		Side B	5620	124	OFDM	Standard	17.39	0.302	0.31
	-----	A730X	Side A	5620	124	OFDM	Hi Cap	17.39	0.149	0.15
	-----		Side B	5620	124	OFDM	Hi Cap	17.39	0.334	0.34
	-----		Side A	5620	124	OFDM	Standard	17.39	0.166	0.17
	9		Side B	5620	124	OFDM	Standard	17.39	0.374	0.38

Body
1.6 W/kg (mW/g)
averaged over 1 gram

1. Battery is fully charged for all tests.
   Power Measured ☒Conducted ☐ERP ☐EIRP
2. SAR Measurement
   Phantom Configuration ☐Left Head ☒ Eli4 ☐Right Head
   SAR Configuration ☐Head ☒Body
3. Test Signal Call Mode ☒Test Code ☐Base Station Simulator
4. Test Configuration ☐With Belt Clip ☐Without Belt Clip ☒N/A
5. Tissue Depth is at least 15.0 cm

Jay M. Moulton
Vice President

This report shall not be reproduced except in full without the written approval of RF Exposure Lab, LLC.

SAR Data Summary – 5800 MHz Body 802.11a

MEASUREMENT RESULTS										
Gap	Plot	Model	Position	Frequency MHz	Frequency Ch.	Modulation	Battery	End Power (dBm)	Measured SAR (W/kg)	Reported SAR (W/kg)
0 mm	-----	A710	Side A	5785	157	OFDM	Hi Cap	17.36	0.401	0.41
	-----			5825	165	OFDM		17.31	0.141	0.15
	-----		Side B	5785	157	OFDM		17.36	0.402	0.42
	-----			5825	165	OFDM		17.31	0.154	0.16
	-----		Side A	5785	157	OFDM	Standard	17.36	0.411	0.42
	-----			5825	165	OFDM		17.31	0.261	0.27
	10		Side B	5785	157	OFDM		17.36	0.426	0.44
	-----			5825	165	OFDM		17.31	0.205	0.21
	-----	A720	Side A	5785	157	OFDM	Hi Cap	17.36	0.410	0.42
	-----			5825	165	OFDM		17.31	0.214	0.22
	-----		Side B	5785	157	OFDM		17.36	0.402	0.42
	-----			5825	165	OFDM		17.31	0.250	0.26
	-----		Side A	5785	157	OFDM	Standard	17.36	0.401	0.41
	-----			5825	165	OFDM		17.31	0.248	0.26
	11		Side B	5785	157	OFDM		17.36	0.417	0.43
	-----			5825	165	OFDM		17.31	0.361	0.38
	-----	A730	Side A	5785	157	OFDM	Hi Cap	17.36	0.476	0.49
	-----			5825	165	OFDM		17.31	0.244	0.25
	-----		Side B	5785	157	OFDM		17.36	0.650	0.67
	-----			5825	165	OFDM		17.31	0.360	0.38
	-----		Side A	5785	157	OFDM	Standard	17.36	0.426	0.44
	-----			5825	165	OFDM		17.31	0.239	0.25
	12		Side B	5785	157	OFDM		17.36	0.682	0.70
	-----			5825	165	OFDM		17.31	0.361	0.38

Body
1.6 W/kg (mW/g)
averaged over 1 gram

1. Battery is fully charged for all tests.
   Power Measured ☒Conducted ☐ERP ☐EIRP
2. SAR Measurement
   Phantom Configuration ☐Left Head ☒ Eli4 ☐Right Head
   SAR Configuration ☐Head ☒Body
3. Test Signal Call Mode ☒Test Code ☐Base Station Simulator
4. Test Configuration ☐With Belt Clip ☐Without Belt Clip ☒N/A
5. Tissue Depth is at least 15.0 cm

Jay M. Moulton
Vice President

This report shall not be reproduced except in full without the written approval of RF Exposure Lab, LLC.

SAR Data Summary – Simultaneous Evaluation

MEASUREMENT RESULTS								
Frequency		Modulation	Frequency		Modulation	SAR_1	SAR_2	SAR Total
MHz	Ch.		MHz	Ch.				
2437	6	DSSS	13.86	1	PCM	0.29	0.01	0.30
5300	60	OFDM	13.86	1	PCM	0.16	0.01	0.17
5620	124	OFDM	13.86	1	PCM	0.38	0.01	0.39
5875	157	OFDM	13.86	1	PCM	0.70	0.01	0.71
						Body **1.6 W/kg (mW/g)** averaged over 1 gram		

The sum of the two transmitters is less than the limit; therefore, the simultaneous transmission is compliant per KDB 447498 D01 v05r01 section 4.3.2.

RFID Calculated SAR per KDB 447498 D01 v05r01 section 4.3.2 2) page 12.

SAR = [(Max power including tolerance, mW)/(Min test separation distance, mm)]*[$\sqrt{f_{(GHz)}}$/7.5]

Max power = 0.019 mW
Test Separation = 5 mm
$f_{(GHz)}$ = 0.01386

SAR = (0.019/5)*(√0.01386/7.5) = 0.01

This report shall not be reproduced except in full without the written approval of RF Exposure Lab, LLC.

9. Test Equipment List

Table 9.1 Equipment Specifications

Type	Calibration Due Date	Calibration Done Date	Serial Number
Staubli Robot TX60L	N/A	N/A	F07/55M6A1/A/01
Measurement Controller CS8c	N/A	N/A	1012
ELI5 Flat Phantom	N/A	N/A	1251
Device Holder	N/A	N/A	N/A
Data Acquisition Electronics 4	08/21/2018	08/21/2017	759
SPEAG E-Field Probe EX3DV4	08/18/2018	08/18/2017	3693
Speag Validation Dipole D2450V2	08/10/2018	08/10/2015	881
Speag Validation Dipole D5GHzV2	08/11/2018	08/11/2015	1119
Agilent N1911A Power Meter	05/20/2019	03/20/2017	GB45100254
Agilent N1922A Power Sensor	06/21/2019	06/21/2017	MY45240464
Advantest R3261A Spectrum Analyzer	03/26/2019	03/20/2017	31720068
Agilent (HP) 8350B Signal Generator	03/26/2019	03/20/2017	2749A10226
Agilent (HP) 83525A RF Plug-In	03/26/2019	03/20/2017	2647A01172
Agilent (HP) 8753C Vector Network Analyzer	03/26/2019	03/20/2017	3135A01724
Agilent (HP) 85047A S-Parameter Test Set	03/26/2019	03/20/2017	2904A00595
Agilent (HP) 8960 Base Station Sim.	03/30/2019	03/30/2017	MY48360364
Anritsu MT8820C	07/27/2019	07/27/2017	6201176199
Agilent 778D Dual Directional Coupler	N/A	N/A	MY48220184
MiniCircuits BW-N20W5+ Fixed 20 dB Attenuator	N/A	N/A	N/A
MiniCircuits SPL-10.7+ Low Pass Filter	N/A	N/A	R8979513746
Aprel Dielectric Probe Assembly	N/A	N/A	0011
Body Equivalent Matter (2450 MHz)	N/A	N/A	N/A
Body Equivalent Matter (5 GHz)	N/A	N/A	N/A

© 2018 RF Exposure Lab, LLC

This report shall not be reproduced except in full without the written approval of RF Exposure Lab, LLC.

10. Conclusion

The SAR measurement indicates that the EUT complies with the RF radiation exposure limits of the FCC/IC. These measurements are taken to simulate the RF effects exposure under worst-case conditions. Precise laboratory measures were taken to assure repeatability of the tests. The tested device complies with the requirements in respect to all parameters subject to the test. The test results and statements relate only to the item(s) tested.

Please note that the absorption and distribution of electromagnetic energy in the body is a very complex phenomena that depends on the mass, shape, and size of the body; the orientation of the body with respect to the field vectors; and, the electrical properties of both the body and the environment. Other variables that may play a substantial role in possible biological effects are those that characterize the environment (e.g. ambient temperature, air velocity, relative humidity, and body insulation) and those that characterize the individual (e.g. age, gender, activity level, debilitation, or disease). Because innumerable factors may interact to determine the specific biological outcome of an exposure to electromagnetic fields, any protection guide shall consider maximal amplification of biological effects as a result of field-body interactions, environmental conditions, and physiological variables.

© 2018 RF Exposure Lab, LLC

This report shall not be reproduced except in full without the written approval of RF Exposure Lab, LLC.

11. References

[1] Federal Communications Commission, ET Docket 93-62, Guidelines for Evaluating the Environmental Effects of Radio Frequency Radiation, August 1996

[2] ANSI/IEEE C95.1 – 1992, American National Standard Safety Levels with respect to Human Exposure to Radio Frequency Electromagnetic Fields, 300kHz to 100GHz, New York: IEEE, 1992.

[3] ANSI/IEEE C95.3 – 1992, IEEE Recommended Practice for the Measurement of Potentially Hazardous Electromagnetic Fields – RF and Microwave, New York: IEEE, 1992.

[4] Federal Communications Commission, OET Bulletin 65 (Edition 97-01), Supplement C (Edition 01-01), Evaluating Compliance with FCC Guidelines for Human Exposure to Radio Frequency Electromagnetic Fields, June 2001.

[5] IEEE Standard 1528 – 2003, IEEE Recommended Practice for Determining the Peak-Spatial Average Specific Absorption Rate (SAR) in the Human Head from Wireless Communication Devices: Measurement Techniques, October 2003.

[6] Industry Canada, RSS – 102e, Radio Frequency Exposure Compliance of Radiocommunication Apparatus (All Frequency Bands), March 2010.

[7] Health Canada, Safety Code 6, Limits of Human Exposure to Radiofrequency Electromagnetic Fields in the Frequency Range from 3kHz to 300 GHz, 2009.

This report shall not be reproduced except in full without the written approval of RF Exposure Lab, LLC.

Appendix A – System Validation Plots and Data

```
************************************************************
Test Result for UIM Dielectric Parameter
Thu 21/Jun/2018
Freq   Frequency(GHz)
FCC_eH Limits for Head Epsilon
FCC_sH Limits for Head Sigma
FCC_eB Limits for Body Epsilon
FCC_sB Limits for Body Sigma
Test_e Epsilon  of  UIM
Test_s Sigma of UIM
************************************************************
Freq          FCC_eB FCC_sB Test_e Test_s
2.4100        52.75  1.91   52.66  1.95
2.4120        52.748 1.912  52.656 1.952*
2.4200        52.74  1.92   52.64  1.96
2.4300        52.73  1.93   52.62  1.97
2.4370        52.716 1.937  52.606 1.984*
2.4400        52.71  1.94   52.60  1.99
2.4500        52.70  1.95   52.58  2.00
2.4600        52.69  1.96   52.57  2.01
2.4620        52.686 1.964  52.566 2.012*
2.4700        52.67  1.98   52.55  2.02
2.4800        52.66  1.99   52.53  2.03

* value interpolated
```


This report shall not be reproduced except in full without the written approval of RF Exposure Lab, LLC.

```
************************************************************
Test Result for UIM Dielectric Parameter
Wed 20/Jun/2018
Freq   Frequency(GHz)
FCC_eH Limits for Head Epsilon
FCC_sH Limits for Head Sigma
FCC_eB Limits for Body Epsilon
FCC_sB Limits for Body Sigma
Test_e Epsilon  of  UIM
Test_s Sigma of UIM
************************************************************
```

Freq	FCC_eB	FCC_sB	Test_e	Test_s
5.1000	49.15	5.18	49.09	5.22
5.1200	49.12	5.21	49.06	5.25
5.1400	49.10	5.23	49.03	5.27
5.1600	49.07	5.25	49.00	5.29
5.1800	49.04	5.28	48.97	5.31
5.2000	49.01	5.30	48.94	5.34
5.2100	49.00	5.31	48.93	5.35*
5.2200	48.99	5.32	48.92	5.36
5.2400	48.96	5.35	48.89	5.38
5.2600	48.93	5.37	48.86	5.41
5.2800	48.91	5.39	48.84	5.43
5.2900	48.895	5.405	48.825	5.44*
5.3000	48.88	5.42	48.81	5.45
5.3200	48.85	5.44	48.78	5.48
5.3400	48.82	5.46	48.75	5.50
5.3600	48.80	5.49	48.72	5.52
5.3800	48.77	5.51	48.69	5.54
5.4000	48.74	5.53	48.66	5.57
5.4200	48.72	5.56	48.63	5.59
5.4400	48.69	5.58	48.60	5.61
5.4600	48.66	5.60	48.57	5.63
5.4800	48.63	5.63	48.54	5.66
5.5000	48.61	5.65	48.51	5.68
5.5200	48.58	5.67	48.48	5.70
5.5400	48.55	5.70	48.45	5.73
5.5600	48.53	5.72	48.42	5.75
5.5800	48.50	5.74	48.39	5.77
5.6000	48.47	5.77	48.36	5.80
5.6100	48.455	5.78	48.345	5.815*
5.6200	48.44	5.79	48.33	5.83
5.6400	48.42	5.81	48.30	5.85
5.6600	48.39	5.84	48.27	5.87
5.6800	48.36	5.86	48.24	5.90
5.7000	48.34	5.88	48.21	5.93
5.7200	48.31	5.91	48.18	5.95
5.7400	48.28	5.93	48.15	5.97
5.7450	48.273	5.935	48.143	5.978*
5.7600	48.25	5.95	48.12	6.00
5.7750	48.235	5.973	48.098	6.023*
5.7800	48.23	5.98	48.09	6.03
5.7850	48.223	5.985	48.08	6.033*
5.8000	48.20	6.00	48.05	6.04
5.8200	48.17	6.02	48.02	6.06
5.8250	48.165	6.028	48.013	6.068*
5.8400	48.15	6.05	47.99	6.09

* value interpolated

This report shall not be reproduced except in full without the written approval of RF Exposure Lab, LLC.

RF Exposure Lab

Plot 1

DUT: Dipole 2450 MHz D2450V2; Type: D2450V2; Serial: D2450V2 - SN: 881

Communication System: CW; Frequency: 2450 MHz; Duty Cycle: 1:1
Medium: MSL2450; Medium parameters used: f = 2450 MHz; σ = 2 S/m; ε_r = 52.58; ρ = 1000 kg/m^3
Phantom section: Flat Section

Test Date: Date: 6/21/2018; Ambient Temp: 23 °C; Tissue Temp: 21 °C
Probe: EX3DV4 - SN3693; ConvF(7.26, 7.2, 7.26); Calibrated: 8/18/2017;
Sensor-Surface: 2mm (Mechanical Surface Detection)
Electronics: DAE4 Sn759; Calibrated: 8/21/2017
Phantom: ELI v5.0; Type: QDOVA002AA; Serial: 1251
Measurement SW: DASY52, Version 52.10 (0); SEMCAD X Version 14.6.10 (7417)

Procedure Notes:

Body Verification/2450 MHz/Area Scan (61x101x1): Interpolated grid: dx=1.200 mm, dy=1.200 mm
Maximum value of SAR (interpolated) = 8.85 W/kg

Body Verification/2450 MHz/Zoom Scan (7x7x7)/Cube 0: Measurement grid: dx=5mm, dy=5mm, dz=5mm
Reference Value = 54.243 V/m; Power Drift = -0.01 dB
Peak SAR (extrapolated) = 11.1 W/kg
P_{in}=100 mW
SAR(1 g) = 5.2 W/kg; SAR(10 g) = 2.41 W/kg
Maximum value of SAR (measured) = 8.93 W/kg

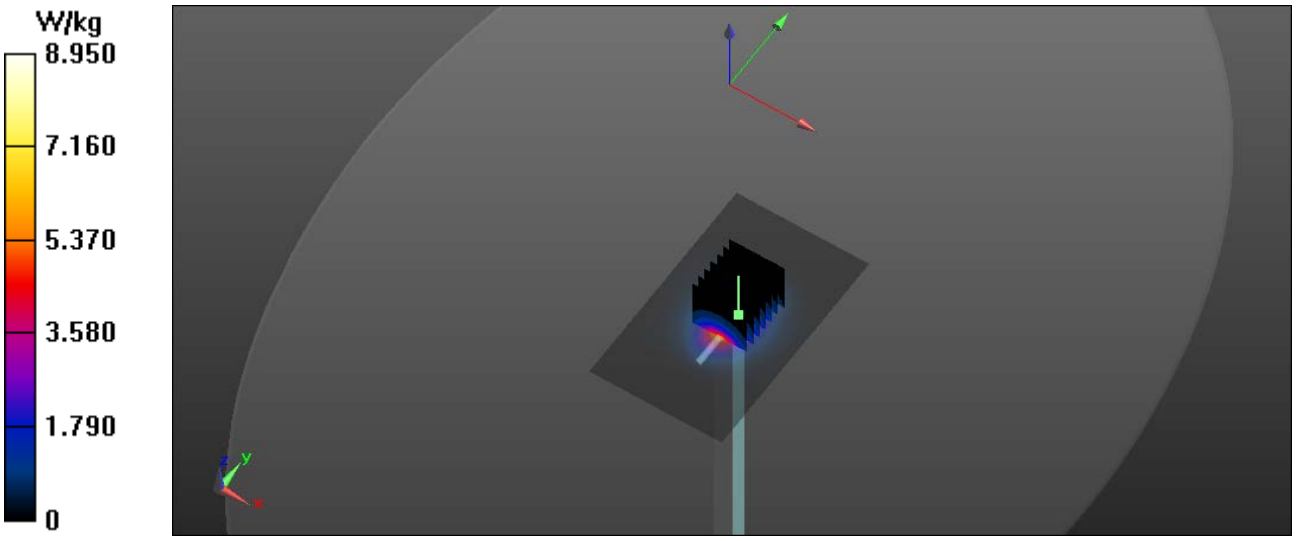

© 2018 RF Exposure Lab, LLC

This report shall not be reproduced except in full without the written approval of RF Exposure Lab, LLC.

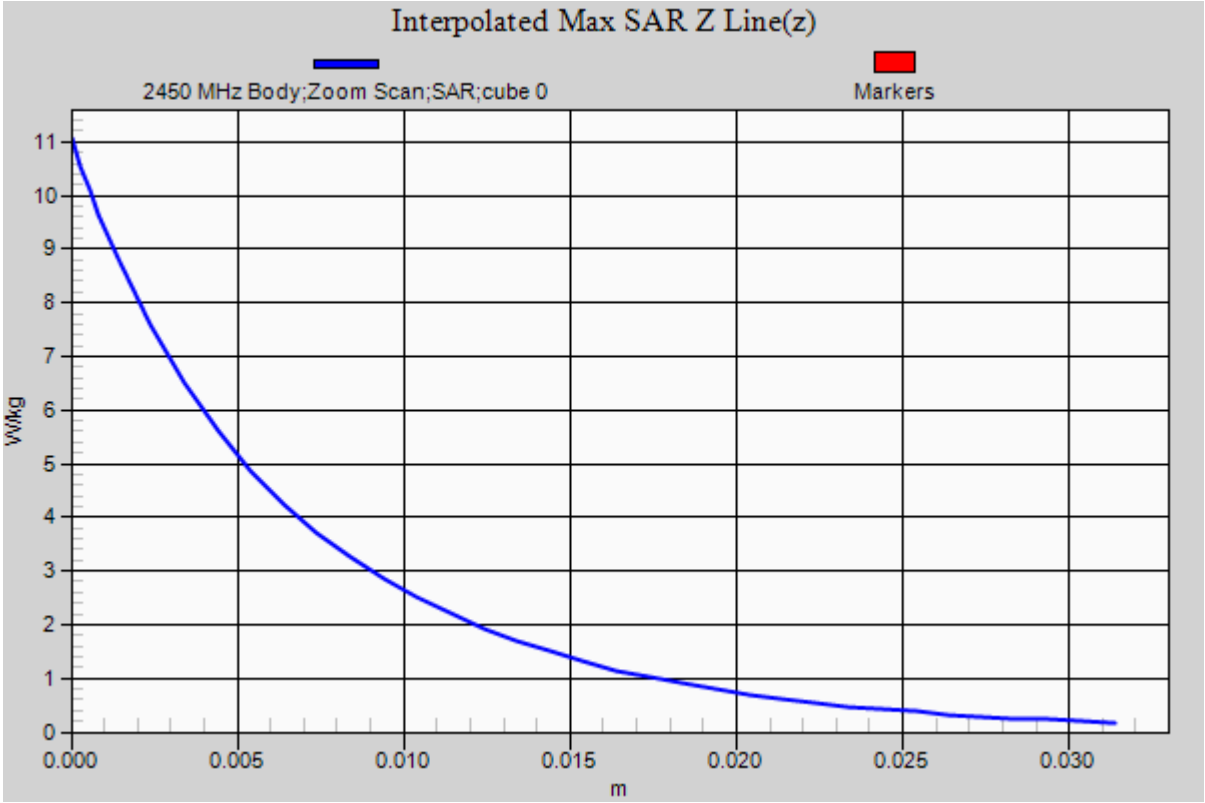

This report shall not be reproduced except in full without the written approval of RF Exposure Lab, LLC.

RF Exposure Lab

Plot 2

DUT: Dipole D5GHzV2; Type: D5GHzV2; Serial: D5GHzV2 - SN: 1119

Communication System: CW; Frequency: 5200 MHz; Duty Cycle: 1:1
Medium: MSL 3-6 GHz; Medium parameters used: f = 5200 MHz; σ = 5.34 S/m; ε_r = 48.94; ρ = 1000 kg/m^3
Phantom section: Flat Section

Test Date: Date: 6/20/2018; Ambient Temp: 23 °C; Tissue Temp: 21 °C
Probe: EX3DV4 - SN3693; ConvF(4.7, 4.7, 4.7); Calibrated: 8/18/2017;
Sensor-Surface: 2mm (Mechanical Surface Detection)
Electronics: DAE4 Sn759; Calibrated: 8/21/2017
Phantom: ELI v5.0; Type: QDOVA002AA; Serial: 1251
Measurement SW: DASY52, Version 52.10 (0); SEMCAD X Version 14.6.10 (7417)

Procedure Notes:

Body Verification/5200 MHz/Area Scan (61x81x1): Interpolated grid: dx=1.000 mm, dy=1.000 mm
Maximum value of SAR (interpolated) = 1.76 W/kg

Body Verification/5200 MHz/Zoom Scan (7x7x12)/Cube 0: Measurement grid: dx=4mm, dy=4mm, dz=2mm
Reference Value = 13.429 V/m; Power Drift = -0.01 dB
Peak SAR (extrapolated) = 3.08 W/kg
Pin=10 mW
SAR(1 g) = 0.781 W/kg; SAR(10 g) = 0.219 W/kg
Maximum value of SAR (measured) = 1.87 W/kg

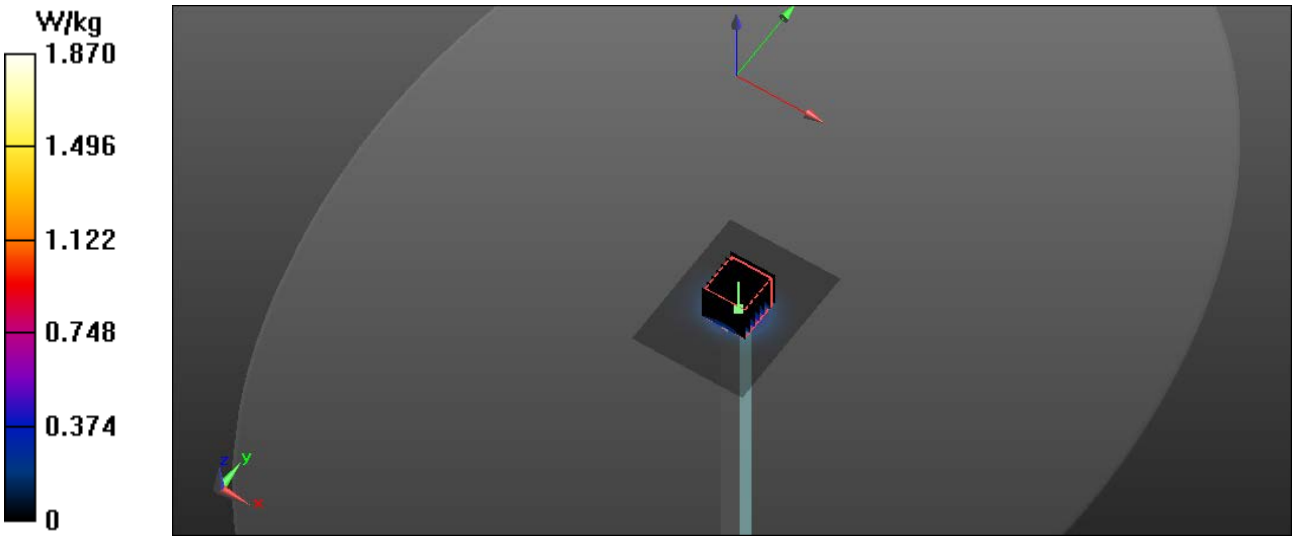

This report shall not be reproduced except in full without the written approval of RF Exposure Lab, LLC.

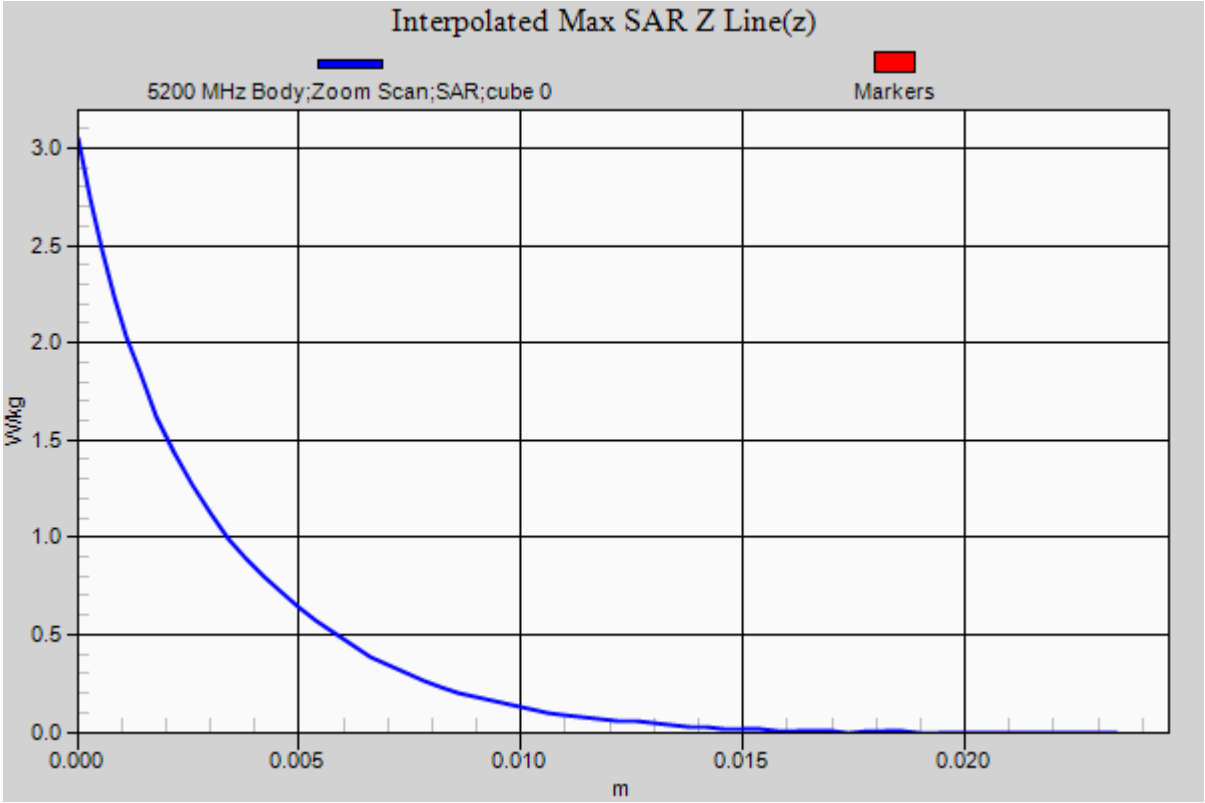

This report shall not be reproduced except in full without the written approval of RF Exposure Lab, LLC.

RF Exposure Lab

Plot 3

DUT: Dipole D5GHzV2; Type: D5GHzV2; Serial: D5GHzV2 - SN: 1119

Communication System: CW; Frequency: 5600 MHz; Duty Cycle: 1:1
Medium: MSL 3-6 GHz; Medium parameters used: f = 5600 MHz; σ = 5.8 S/m; ε_r = 48.36; ρ = 1000 kg/m^3
Phantom section: Flat Section

Test Date: Date: 6/20/2018; Ambient Temp: 23 °C; Tissue Temp: 21 °C
Probe: EX3DV4 - SN3693; ConvF(4, 4, 4); Calibrated: 8/18/2017;
Sensor-Surface: 2mm (Mechanical Surface Detection)
Electronics: DAE4 Sn759; Calibrated: 8/21/2017
Phantom: ELI v5.0; Type: QDOVA002AA; Serial: 1251
Measurement SW: DASY52, Version 52.10 (0); SEMCAD X Version 14.6.10 (7417)

Procedure Notes:

Body Verification/5600 MHz/Area Scan (61x81x1): Interpolated grid: dx=1.000 mm, dy=1.000 mm
Maximum value of SAR (interpolated) = 1.89 W/kg

Body Verification/5600 MHz/Zoom Scan (7x7x12)/Cube 0: Measurement grid: dx=4mm, dy=4mm, dz=2mm
Reference Value = 12.967 V/m; Power Drift = -0.03 dB
Peak SAR (extrapolated) = 3.35 W/kg
Pin=10 mW
SAR(1 g) = 0.799 W/kg; SAR(10 g) = 0.213 W/kg
Maximum value of SAR (measured) = 2.03 W/kg

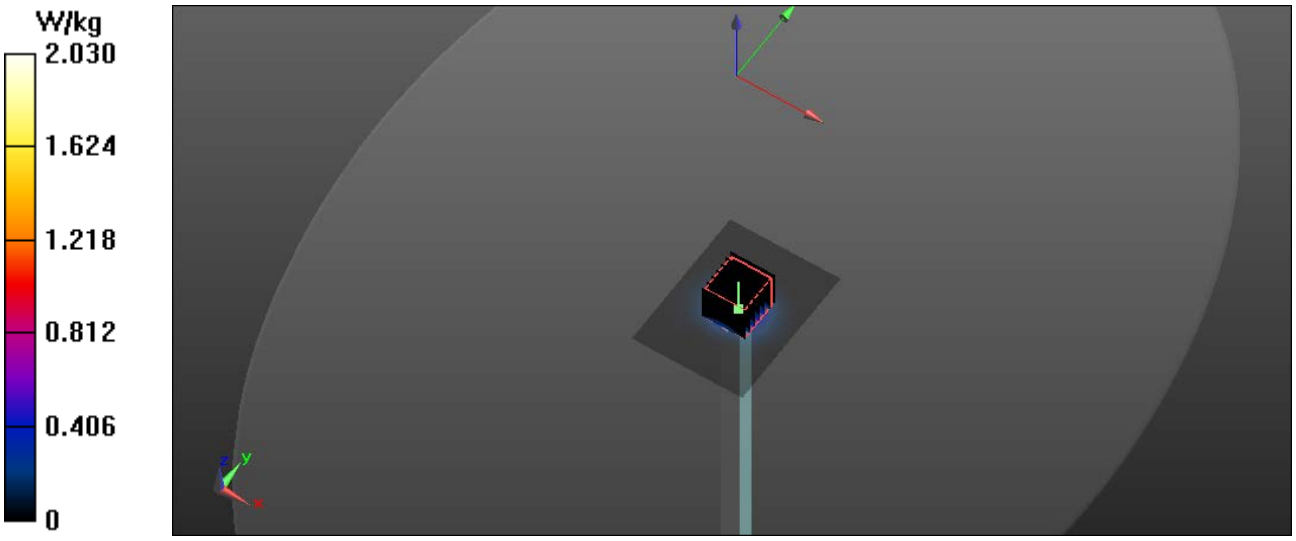

This report shall not be reproduced except in full without the written approval of RF Exposure Lab, LLC.

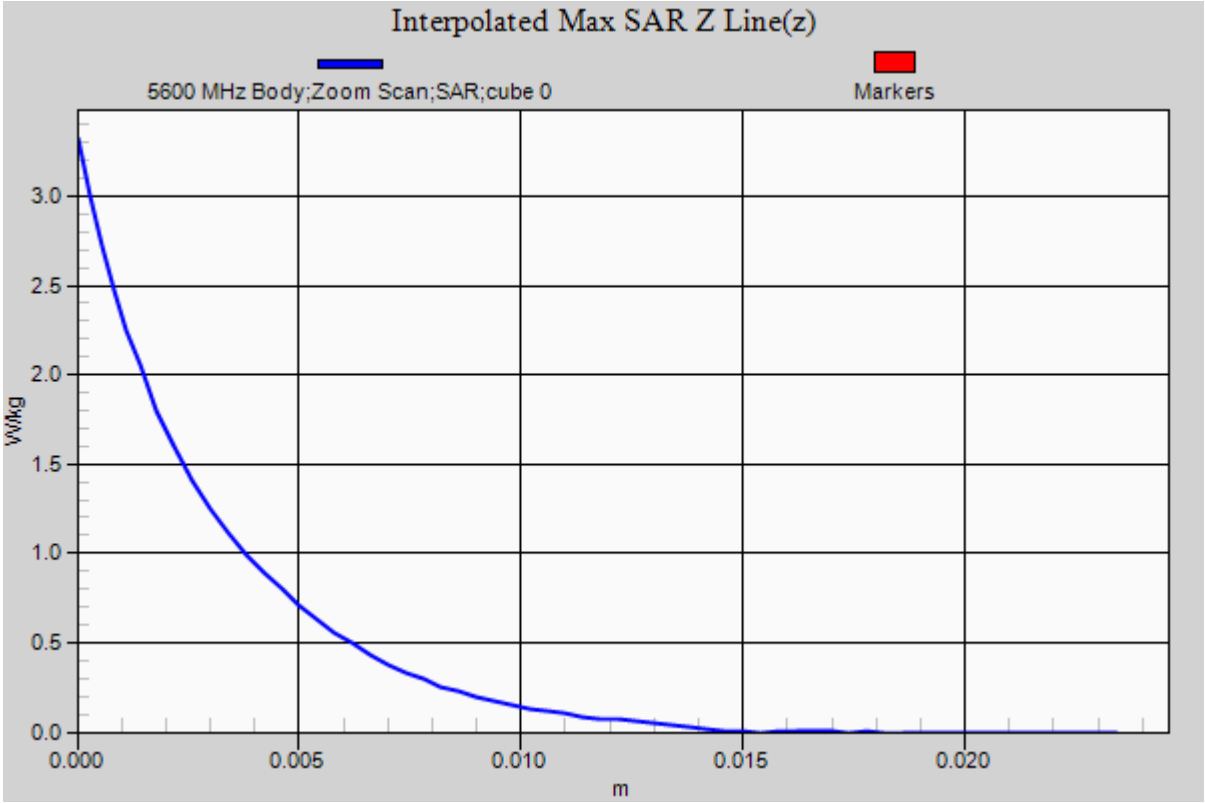

This report shall not be reproduced except in full without the written approval of RF Exposure Lab, LLC.

RF Exposure Lab

Plot 4

DUT: Dipole D5GHzV2; Type: D5GHzV2; Serial: D5GHzV2 - SN: 1119

Communication System: CW; Frequency: 5800 MHz; Duty Cycle: 1:1
Medium: MSL 3-6 GHz; Medium parameters used: f = 5800 MHz; σ = 6.04 S/m; ε_r = 48.05; ρ = 1000 kg/m^3
Phantom section: Flat Section

Test Date: Date: 6/20/2018; Ambient Temp: 23 °C; Tissue Temp: 21 °C
Probe: EX3DV4 - SN3693; ConvF(4.21, 4.21, 4.21); Calibrated: 8/18/2017;
Sensor-Surface: 2mm (Mechanical Surface Detection)
Electronics: DAE4 Sn759; Calibrated: 8/21/2017
Phantom: ELI v5.0; Type: QDOVA002AA; Serial: 1251
Measurement SW: DASY52, Version 52.10 (0); SEMCAD X Version 14.6.10 (7417)

Procedure Notes:

Body Verification/5800 MHz/Area Scan (61x81x1): Interpolated grid: dx=1.000 mm, dy=1.000 mm
Maximum value of SAR (interpolated) = 1.69 W/kg

Body Verification/5800 MHz/Zoom Scan (7x7x12)/Cube 0: Measurement grid: dx=4mm, dy=4mm, dz=2mm
Reference Value = 12.497 V/m; Power Drift = 0.01 dB
Peak SAR (extrapolated) = 2.87 W/kg
Pin=10 mW
SAR(1 g) = 0.779 W/kg; SAR(10 g) = 0.205 W/kg
Maximum value of SAR (measured) = 1.79 W/kg

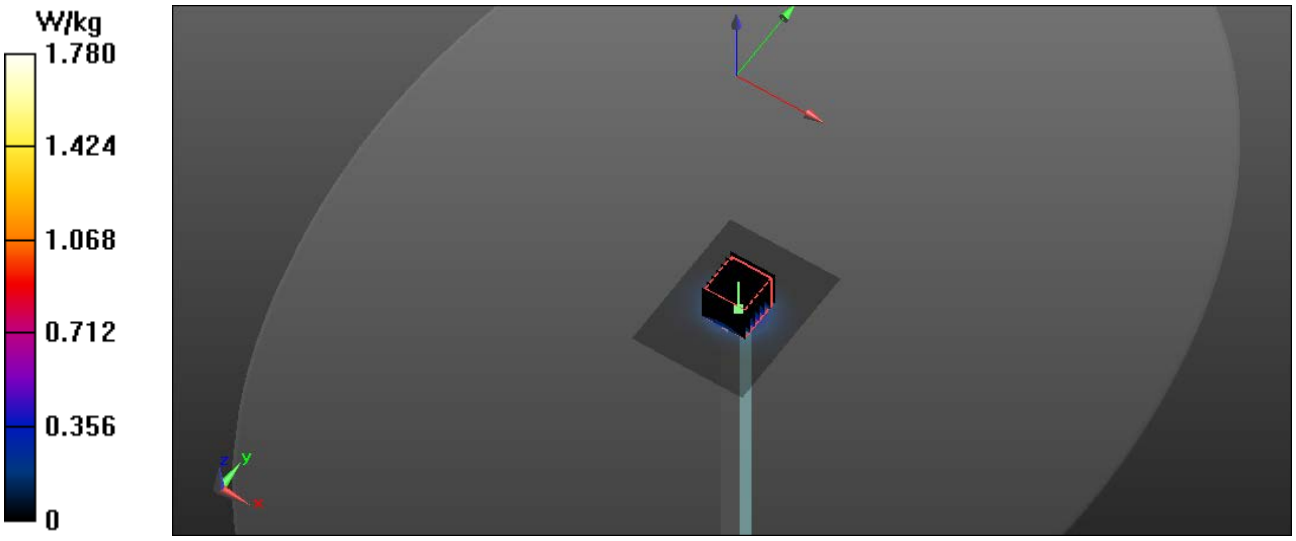

This report shall not be reproduced except in full without the written approval of RF Exposure Lab, LLC.

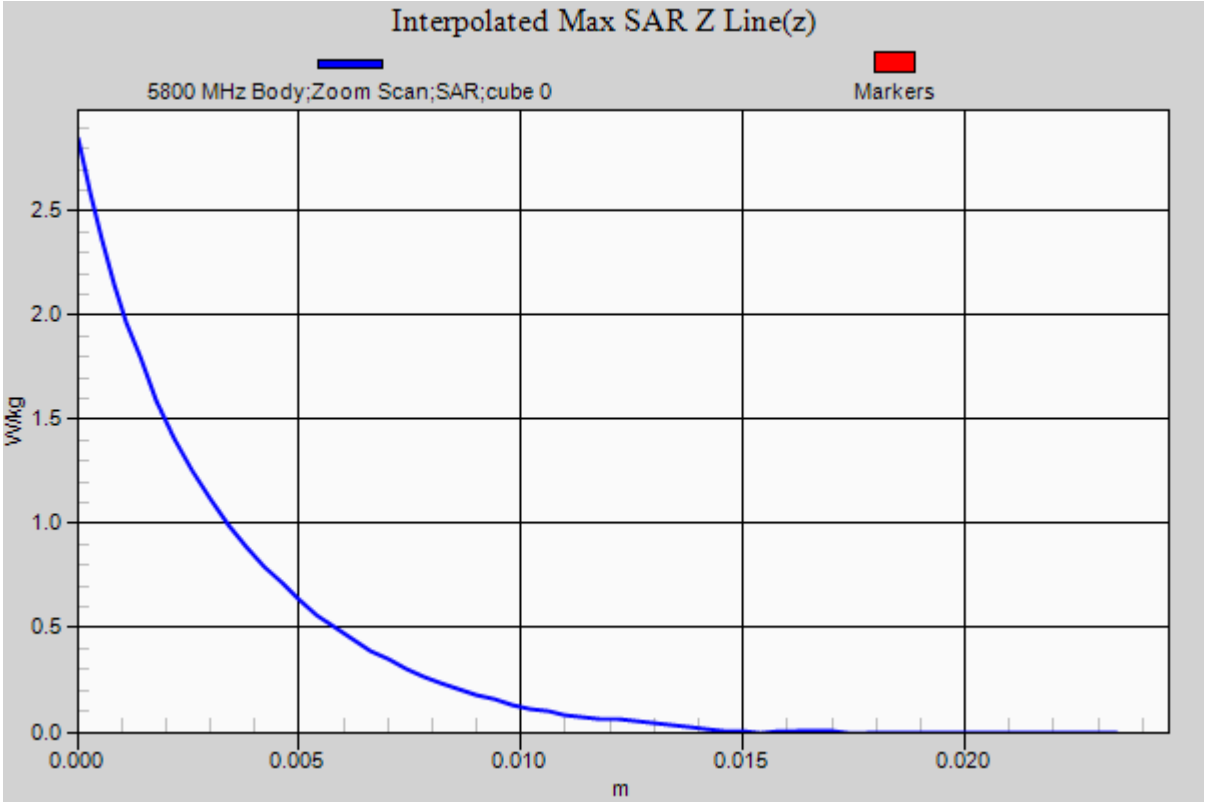

This report shall not be reproduced except in full without the written approval of RF Exposure Lab, LLC.

Appendix B – SAR Test Data Plots

© 2018 RF Exposure Lab, LLC

This report shall not be reproduced except in full without the written approval of RF Exposure Lab, LLC.

RF Exposure Lab

Plot 1

DUT: A710X; Type: Handheld Reader; Serial: 7418200044

Communication System: WiFi 802.11b (DSSS, 1 Mbps) 60% DC; Frequency: 2437 MHz; Duty Cycle: 1:1.65959
Medium: MSL2450; Medium parameters used (interpolated): f = 2437 MHz; σ = 1.984 S/m; ε_r = 52.606; ρ = 1000 kg/m^3
Phantom section: Flat Section

Test Date: Date: 6/21/2018; Ambient Temp: 23 °C; Tissue Temp: 21 °C

Probe: EX3DV4 - SN3693; ConvF(7.26, 7.26, 7.26); Calibrated: 8/18/2017;
Sensor-Surface: 2mm (Mechanical Surface Detection)
Electronics: DAE4 Sn759; Calibrated: 8/21/2017
Phantom: ELI v5.0; Type: QDOVA002AA; Serial: 1251
Measurement SW: DASY52, Version 52.10 (0); SEMCAD X Version 14.6.10 (7417)

Procedure Notes:

A710X 2450 MHz NA/Standard Side A Mid/Area Scan (9x7x1): Measurement grid: dx=10mm, dy=10mm

Info: Interpolated medium parameters used for SAR evaluation.
Maximum value of SAR (measured) = 0.237 W/kg

A710X 2450 MHz NA/Standard Side A Mid/Zoom Scan (7x7x7)/Cube 0: Measurement grid: dx=5mm, dy=5mm, dz=5mm
Reference Value = 2.270 V/m; Power Drift = -0.02 dB
Peak SAR (extrapolated) = 0.337 W/kg
SAR(1 g) = 0.173 W/kg

Info: Interpolated medium parameters used for SAR evaluation.
Maximum value of SAR (measured) = 0.242 W/kg

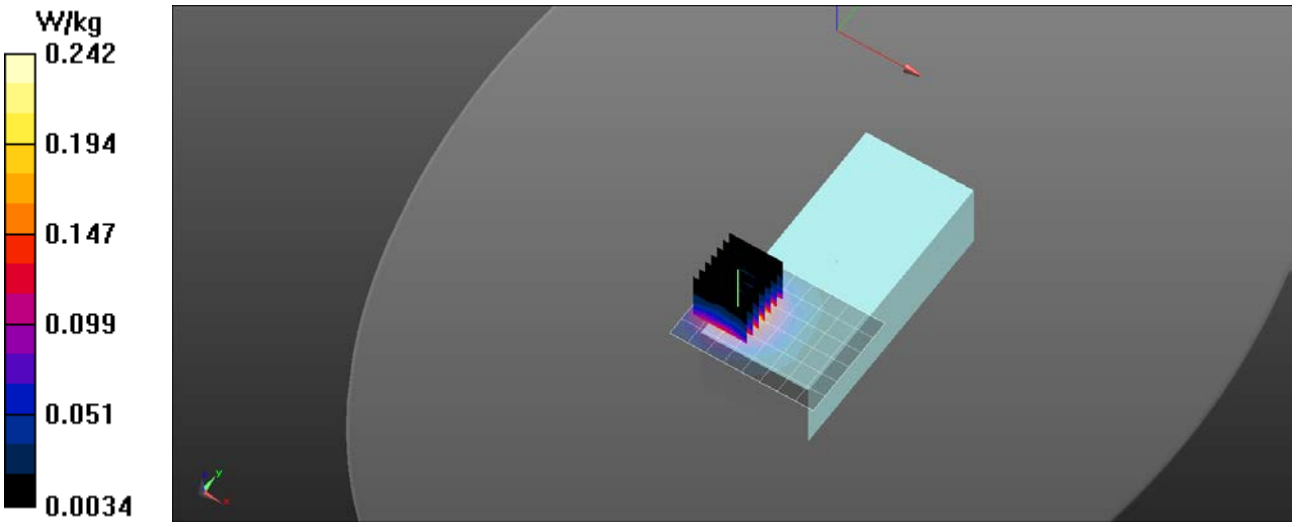

This report shall not be reproduced except in full without the written approval of RF Exposure Lab, LLC.

RF Exposure Lab

Plot 2

DUT: A720X; Type: Handheld Reader; Serial: 7518200141

Communication System: WiFi 802.11b (DSSS, 1 Mbps) 60% DC; Frequency: 2437 MHz; Duty Cycle: 1:1.65959
Medium: MSL2450; Medium parameters used (interpolated): f = 2437 MHz; σ = 1.984 S/m; ε_r = 52.606; ρ = 1000 kg/m^3
Phantom section: Flat Section

Test Date: Date: 6/21/2018; Ambient Temp: 23 °C; Tissue Temp: 21 °C

Probe: EX3DV4 - SN3693; ConvF(7.26, 7.26, 7.26); Calibrated: 8/18/2017;
Sensor-Surface: 2mm (Mechanical Surface Detection)
Electronics: DAE4 Sn759; Calibrated: 8/21/2017
Phantom: ELI v5.0; Type: QDOVA002AA; Serial: 1251
Measurement SW: DASY52, Version 52.10 (0); SEMCAD X Version 14.6.10 (7417)

Procedure Notes:

A720X 2450 MHz NA/Standard Side A Mid/Area Scan (9x7x1): Measurement grid: dx=10mm, dy=10mm

Info: Interpolated medium parameters used for SAR evaluation.
Maximum value of SAR (measured) = 0.296 W/kg

A720X 2450 MHz NA/Standard Side A Mid/Zoom Scan (7x7x7)/Cube 0: Measurement grid: dx=5mm, dy=5mm, dz=5mm
Reference Value = 1.366 V/m; Power Drift = 0.03 dB
Peak SAR (extrapolated) = 0.424 W/kg
SAR(1 g) = 0.218 W/kg

Info: Interpolated medium parameters used for SAR evaluation.
Maximum value of SAR (measured) = 0.323 W/kg

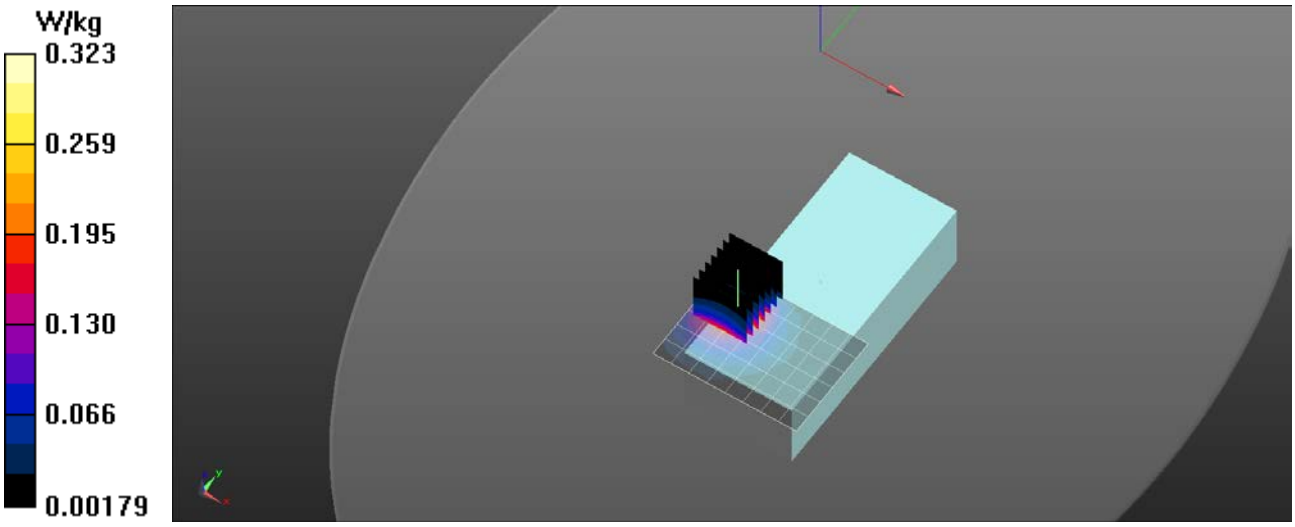

This report shall not be reproduced except in full without the written approval of RF Exposure Lab, LLC.

RF Exposure Lab

Plot 3

DUT: A730X; Type: Handheld Reader; Serial: 7618230017

Communication System: WiFi 802.11b (DSSS, 1 Mbps) 60% DC; Frequency: 2437 MHz; Duty Cycle: 1:1.65959
Medium: MSL2450; Medium parameters used (interpolated): f = 2437 MHz; σ = 1.984 S/m; ε_r = 52.606; ρ = 1000 kg/m^3
Phantom section: Flat Section

Test Date: Date: 6/21/2018; Ambient Temp: 23 °C; Tissue Temp: 21 °C

Probe: EX3DV4 - SN3693; ConvF(7.26, 7.26, 7.26); Calibrated: 8/18/2017;
Sensor-Surface: 2mm (Mechanical Surface Detection)
Electronics: DAE4 Sn759; Calibrated: 8/21/2017
Phantom: ELI v5.0; Type: QDOVA002AA; Serial: 1251
Measurement SW: DASY52, Version 52.10 (0); SEMCAD X Version 14.6.10 (7417)

Procedure Notes:

A730X 2450 MHz NA/Hi Cap Side A Mid/Area Scan (9x7x1): Measurement grid: dx=10mm, dy=10mm

Info: Interpolated medium parameters used for SAR evaluation.
Maximum value of SAR (measured) = 0.212 W/kg

A730X 2450 MHz NA/Hi Cap Side A Mid/Zoom Scan (7x7x7)/Cube 0: Measurement grid: dx=5mm, dy=5mm, dz=5mm
Reference Value = 1.292 V/m; Power Drift = -0.04 dB
Peak SAR (extrapolated) = 0.315 W/kg
SAR(1 g) = 0.157 W/kg

Info: Interpolated medium parameters used for SAR evaluation.
Maximum value of SAR (measured) = 0.230 W/kg

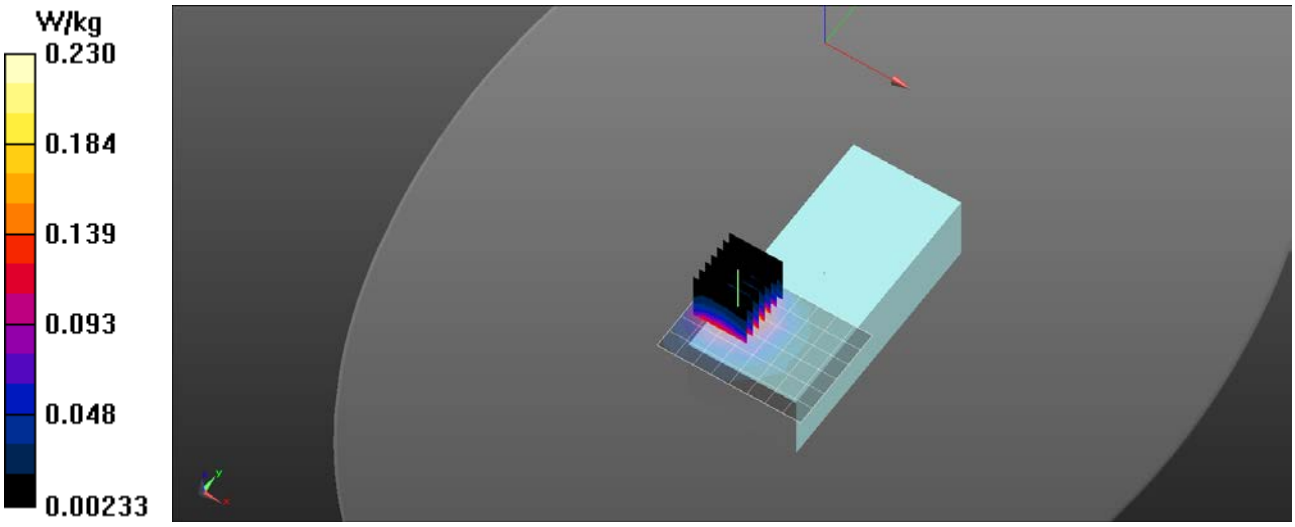

This report shall not be reproduced except in full without the written approval of RF Exposure Lab, LLC.

RF Exposure Lab

Plot 4

DUT: A710X; Type: Handheld Reader; Serial: 7418200044

Communication System: WiFi 802.11a (OFDM, 6 Mbps) 60% DC; Frequency: 5300 MHz; Duty Cycle: 1:1.65959
Medium: MSL 3-6 GHz; Medium parameters used: f = 5300 MHz; σ = 5.45 S/m; ε_r = 48.81; ρ = 1000 kg/m^3
Phantom section: Flat Section

Test Date: Date: 6/20/2018; Ambient Temp: 23 °C; Tissue Temp: 21 °C

Probe: EX3DV4 - SN3693; ConvF(4.46, 4.46, 4.46); Calibrated: 8/18/2017;
Sensor-Surface: 2mm (Mechanical Surface Detection)
Electronics: DAE4 Sn759; Calibrated: 8/21/2017
Phantom: ELI v5.0; Type: QDOVA002AA; Serial: 1251
Measurement SW: DASY52, Version 52.10 (0); SEMCAD X Version 14.6.10 (7417)

Procedure Notes:

A710X 5200 MHz NA/Hi Cap Side B 60/Area Scan (9x7x1): Measurement grid: dx=10mm, dy=10mm
Maximum value of SAR (measured) = 0.203 W/kg

A710X 5200 MHz NA/Hi Cap Side B 60/Zoom Scan (7x7x12)/Cube 0: Measurement grid: dx=4mm, dy=4mm, dz=2mm
Reference Value = 2.722 V/m; Power Drift = -0.01 dB
Peak SAR (extrapolated) = 0.784 W/kg
SAR(1 g) = 0.106 W/kg
Maximum value of SAR (measured) = 0.399 W/kg

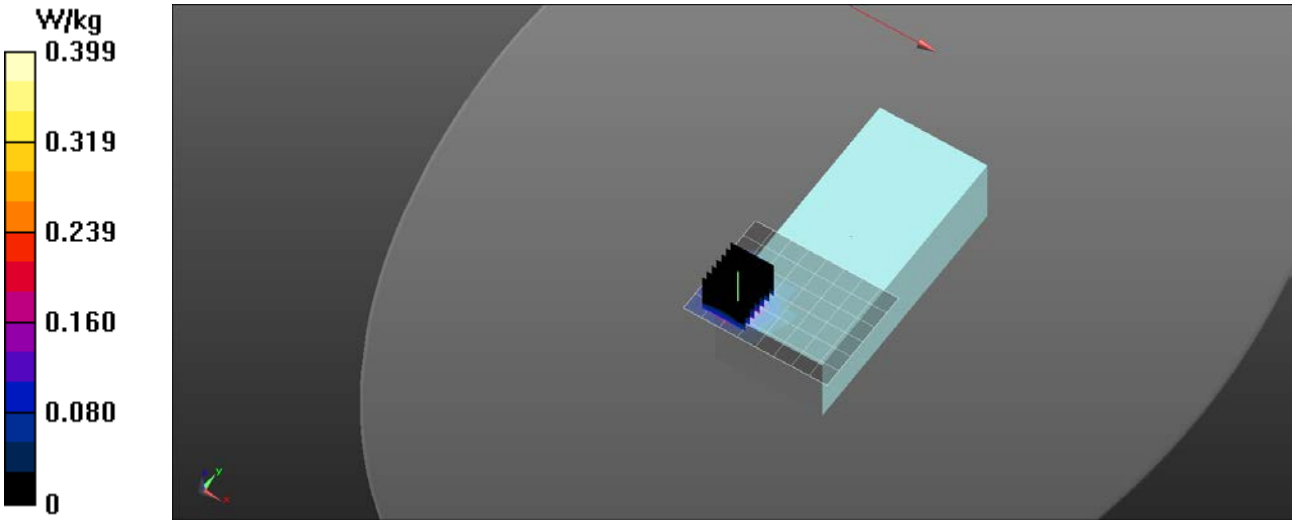

This report shall not be reproduced except in full without the written approval of RF Exposure Lab, LLC.

RF Exposure Lab

Plot 5

DUT: A720X; Type: Handheld Reader; Serial: 7518200141

Communication System: WiFi 802.11a (OFDM, 6 Mbps) 60% DC; Frequency: 5300 MHz; Duty Cycle: 1:1.65959
Medium: MSL 3-6 GHz; Medium parameters used: f = 5300 MHz; σ = 5.45 S/m; ε_r = 48.81; ρ = 1000 kg/m^3
Phantom section: Flat Section

Test Date: Date: 6/20/2018; Ambient Temp: 23 °C; Tissue Temp: 21 °C

Probe: EX3DV4 - SN3693; ConvF(4.46, 4.46, 4.46); Calibrated: 8/18/2017;
Sensor-Surface: 2mm (Mechanical Surface Detection)
Electronics: DAE4 Sn759; Calibrated: 8/21/2017
Phantom: ELI v5.0; Type: QDOVA002AA; Serial: 1251
Measurement SW: DASY52, Version 52.10 (0); SEMCAD X Version 14.6.10 (7417)

Procedure Notes:

A720X 5200 MHz NA/Standard Side B 60/Area Scan (9x7x1): Measurement grid: dx=10mm, dy=10mm
Maximum value of SAR (measured) = 0.257 W/kg

A720X 5200 MHz NA/Standard Side B 60/Zoom Scan (7x7x12)/Cube 0: Measurement grid: dx=4mm, dy=4mm, dz=2mm
Reference Value = 2.513 V/m; Power Drift = -0.02 dB
Peak SAR (extrapolated) = 0.458 W/kg
SAR(1 g) = 0.141 W/kg
Maximum value of SAR (measured) = 0.277 W/kg

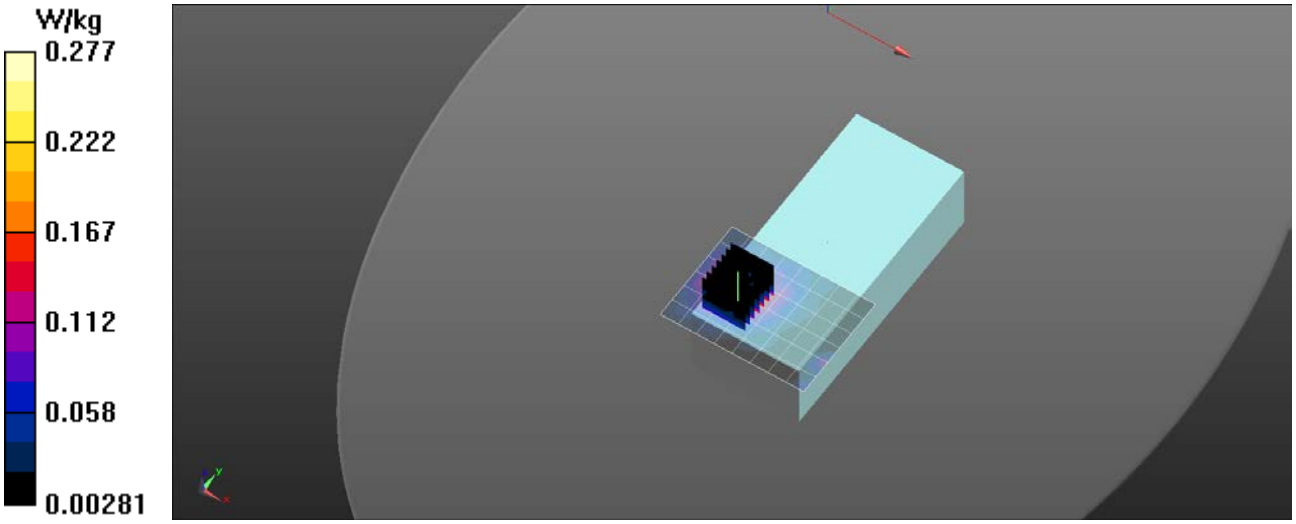

This report shall not be reproduced except in full without the written approval of RF Exposure Lab, LLC.

RF Exposure Lab

Plot 6

DUT: A730X; Type: Handheld Reader; Serial: 7618230017

Communication System: WiFi 802.11a (OFDM, 6 Mbps) 60% DC; Frequency: 5300 MHz; Duty Cycle: 1:1.65959
Medium: MSL 3-6 GHz; Medium parameters used: f = 5300 MHz; σ = 5.45 S/m; ε_r = 48.81; ρ = 1000 kg/m^3
Phantom section: Flat Section

Test Date: Date: 6/20/2018; Ambient Temp: 23 °C; Tissue Temp: 21 °C

Probe: EX3DV4 - SN3693; ConvF(4.46, 4.46, 4.46); Calibrated: 8/18/2017;
Sensor-Surface: 2mm (Mechanical Surface Detection)
Electronics: DAE4 Sn759; Calibrated: 8/21/2017
Phantom: ELI v5.0; Type: QDOVA002AA; Serial: 1251
Measurement SW: DASY52, Version 52.10 (0); SEMCAD X Version 14.6.10 (7417)

Procedure Notes:

A730X 5200 MHz NA/Hi Cap Side B 60/Area Scan (9x7x1): Measurement grid: dx=10mm, dy=10mm
Maximum value of SAR (measured) = 0.281 W/kg

A730X 5200 MHz NA/Hi Cap Side B 60/Zoom Scan (7x7x12)/Cube 0: Measurement grid: dx=4mm, dy=4mm, dz=2mm
Reference Value = 3.208 V/m; Power Drift = 0.01 dB
Peak SAR (extrapolated) = 0.656 W/kg
SAR(1 g) = 0.159 W/kg
Maximum value of SAR (measured) = 0.296 W/kg

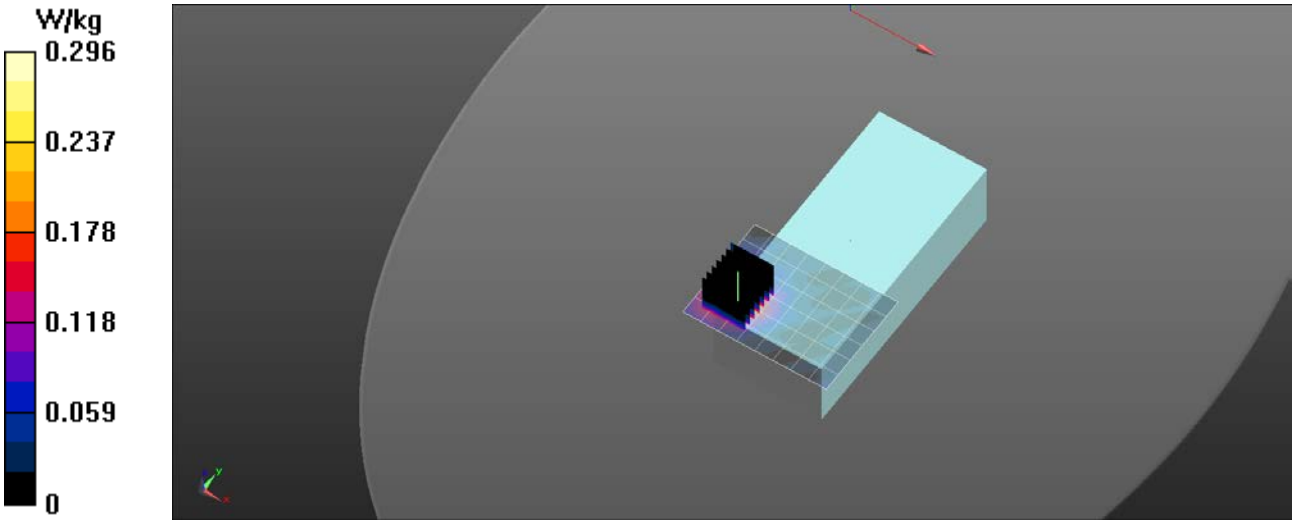

This report shall not be reproduced except in full without the written approval of RF Exposure Lab, LLC.

RF Exposure Lab

Plot 7

DUT: A710X; Type: Handheld Reader; Serial: 7418200044

Communication System: WiFi 802.11a (OFDM, 6 Mbps) 60% DC; Frequency: 5620 MHz; Duty Cycle: 1:1.65959
Medium: MSL 3-6 GHz; Medium parameters used: f = 5620 MHz; σ = 5.83 S/m; ε_r = 48.33; ρ = 1000 kg/m^3
Phantom section: Flat Section

Test Date: Date: 6/20/2018; Ambient Temp: 23 °C; Tissue Temp: 21 °C

Probe: EX3DV4 - SN3693; ConvF(4, 4, 4); Calibrated: 8/18/2017;
Sensor-Surface: 2mm (Mechanical Surface Detection)
Electronics: DAE4 Sn759; Calibrated: 8/21/2017
Phantom: ELI v5.0; Type: QDOVA002AA; Serial: 1251
Measurement SW: DASY52, Version 52.10 (0); SEMCAD X Version 14.6.10 (7417)

Procedure Notes:

A710X 5600 MHz NA/Standard Side B 124/Area Scan (9x7x1): Measurement grid: dx=10mm, dy=10mm
Maximum value of SAR (measured) = 0.598 W/kg

A710X 5600 MHz NA/Standard Side B 124/Zoom Scan (7x7x12)/Cube 0: Measurement grid: dx=4mm, dy=4mm, dz=2mm
Reference Value = 1.465 V/m; Power Drift = 0.02 dB
Peak SAR (extrapolated) = 1.23 W/kg
SAR(1 g) = 0.336 W/kg
Maximum value of SAR (measured) = 0.656 W/kg

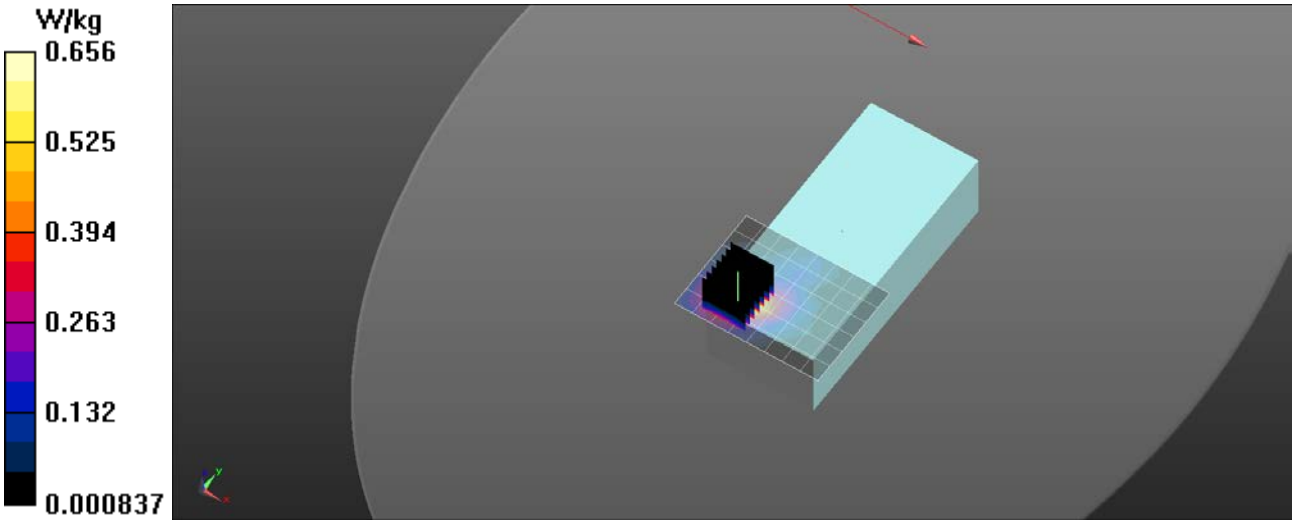

This report shall not be reproduced except in full without the written approval of RF Exposure Lab, LLC.

RF Exposure Lab

Plot 8

DUT: A720X; Type: Handheld Reader; Serial: 7518200141

Communication System: WiFi 802.11a (OFDM, 6 Mbps) 60% DC; Frequency: 5620 MHz; Duty Cycle: 1:1.65959
Medium: MSL 3-6 GHz; Medium parameters used: f = 5620 MHz; σ = 5.83 S/m; ε_r = 48.33; ρ = 1000 kg/m^3
Phantom section: Flat Section

Test Date: Date: 6/20/2018; Ambient Temp: 23 °C; Tissue Temp: 21 °C

Probe: EX3DV4 - SN3693; ConvF(4, 4, 4); Calibrated: 8/18/2017;
Sensor-Surface: 2mm (Mechanical Surface Detection)
Electronics: DAE4 Sn759; Calibrated: 8/21/2017
Phantom: ELI v5.0; Type: QDOVA002AA; Serial: 1251
Measurement SW: DASY52, Version 52.10 (0); SEMCAD X Version 14.6.10 (7417)

Procedure Notes:

A720X 5600 MHz NA/Standard Side B 124/Area Scan (9x7x1): Measurement grid: dx=10mm, dy=10mm
Maximum value of SAR (measured) = 0.568 W/kg

A720X 5600 MHz NA/Standard Side B 124/Zoom Scan (7x7x12)/Cube 0: Measurement grid: dx=4mm, dy=4mm, dz=2mm
Reference Value = 1.959 V/m; Power Drift = 0.01 dB
Peak SAR (extrapolated) = 1.09 W/kg
SAR(1 g) = 0.302 W/kg
Maximum value of SAR (measured) = 0.585 W/kg

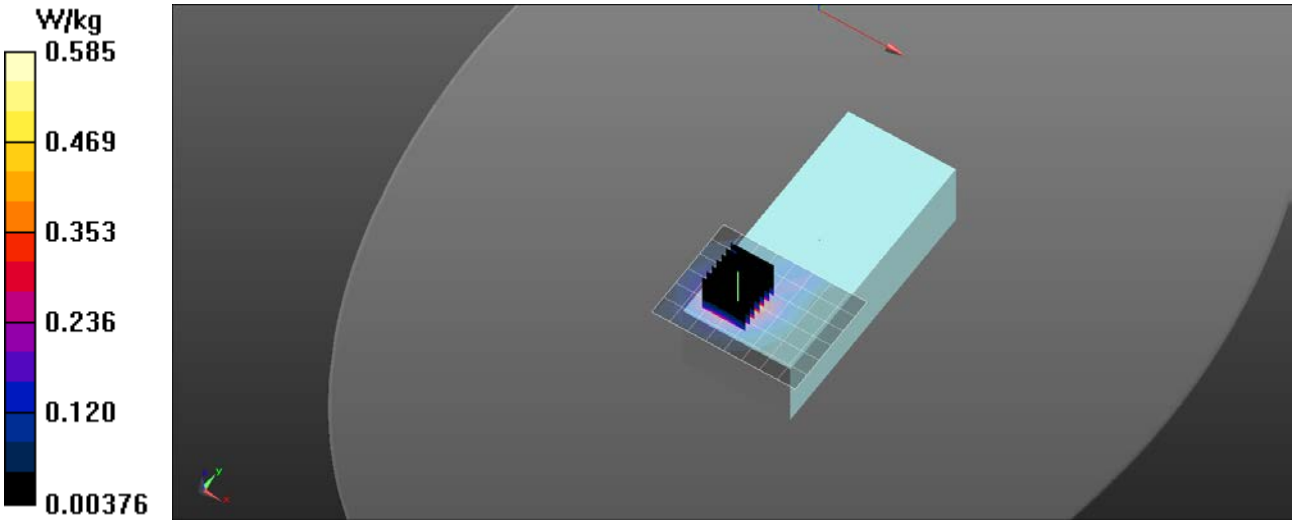

This report shall not be reproduced except in full without the written approval of RF Exposure Lab, LLC.

RF Exposure Lab

Plot 9

DUT: A730X; Type: Handheld Reader; Serial: 7618230017

Communication System: WiFi 802.11a (OFDM, 6 Mbps) 60% DC; Frequency: 5620 MHz; Duty Cycle: 1:1.65959
Medium: MSL 3-6 GHz; Medium parameters used: f = 5620 MHz; σ = 5.83 S/m; ε_r = 48.33; ρ = 1000 kg/m^3
Phantom section: Flat Section

Test Date: Date: 6/21/2018; Ambient Temp: 23 °C; Tissue Temp: 21 °C

Probe: EX3DV4 - SN3693; ConvF(4, 4, 4); Calibrated: 8/18/2017;
Sensor-Surface: 2mm (Mechanical Surface Detection)
Electronics: DAE4 Sn759; Calibrated: 8/21/2017
Phantom: ELI v5.0; Type: QDOVA002AA; Serial: 1251
Measurement SW: DASY52, Version 52.10 (0); SEMCAD X Version 14.6.10 (7417)

Procedure Notes:

A730X 5600 MHz NA/Standard Side B 124/Area Scan (9x7x1): Measurement grid: dx=10mm, dy=10mm
Maximum value of SAR (measured) = 0.609 W/kg

A730X 5600 MHz NA/Standard Side B 124/Zoom Scan (7x7x12)/Cube 0: Measurement grid: dx=4mm, dy=4mm, dz=2mm
Reference Value = 3.414 V/m; Power Drift = -0.03 dB
Peak SAR (extrapolated) = 1.22 W/kg
SAR(1 g) = 0.374 W/kg
Maximum value of SAR (measured) = 0.775 W/kg

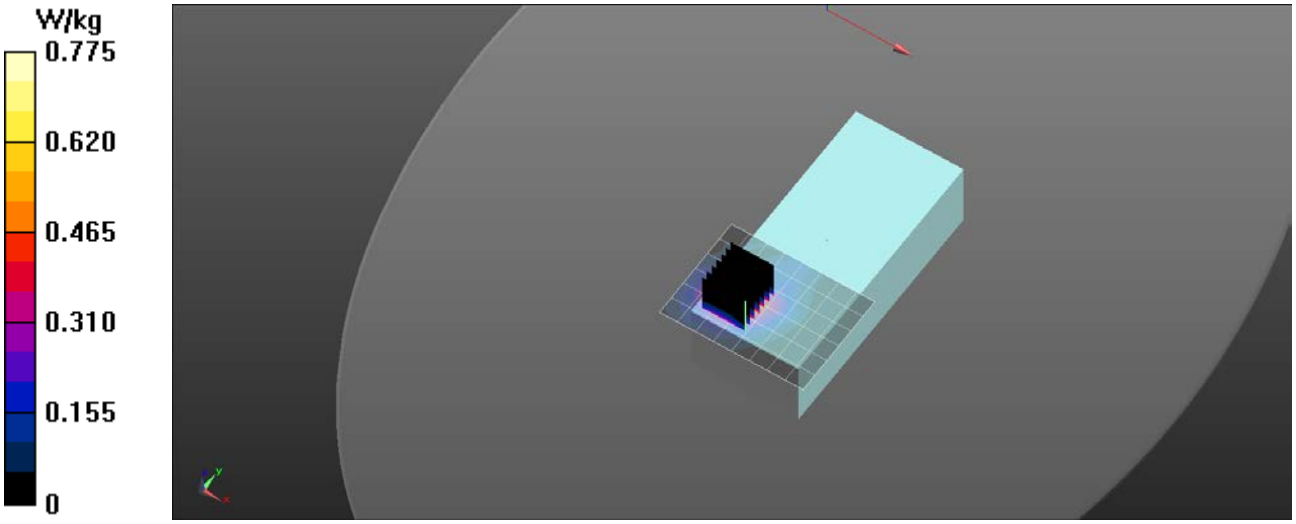

This report shall not be reproduced except in full without the written approval of RF Exposure Lab, LLC.

RF Exposure Lab

Plot 10

DUT: A710X; Type: Handheld Reader; Serial: 7418200044

Communication System: WiFi 802.11a (OFDM, 6 Mbps) 60% DC; Frequency: 5785 MHz; Duty Cycle: 1:1.65959
Medium: MSL 3-6 GHz; Medium parameters used (interpolated): f = 5785 MHz; σ = 6.033 S/m; ε_r = 48.08; ρ = 1000 kg/m^3
Phantom section: Flat Section

Test Date: Date: 6/20/2018; Ambient Temp: 23 °C; Tissue Temp: 21 °C

Probe: EX3DV4 - SN3693; ConvF(4.21, 4.21, 4.21); Calibrated: 8/18/2017;
Sensor-Surface: 2mm (Mechanical Surface Detection)
Electronics: DAE4 Sn759; Calibrated: 8/21/2017
Phantom: ELI v5.0; Type: QDOVA002AA; Serial: 1251
Measurement SW: DASY52, Version 52.10 (0); SEMCAD X Version 14.6.10 (7417)

Procedure Notes:

A710X 5800 MHz NA/Standard Side B 157/Area Scan (9x7x1): Measurement grid: dx=10mm, dy=10mm

Info: Interpolated medium parameters used for SAR evaluation.
Maximum value of SAR (measured) = 0.709 W/kg

A710X 5800 MHz NA/Standard Side B 157/Zoom Scan (7x7x12)/Cube 0: Measurement grid: dx=4mm, dy=4mm, dz=2mm
Reference Value = 3.688 V/m; Power Drift = -0.01 dB
Peak SAR (extrapolated) = 1.34 W/kg
SAR(1 g) = 0.426 W/kg

Info: Interpolated medium parameters used for SAR evaluation.
Maximum value of SAR (measured) = 0.710 W/kg

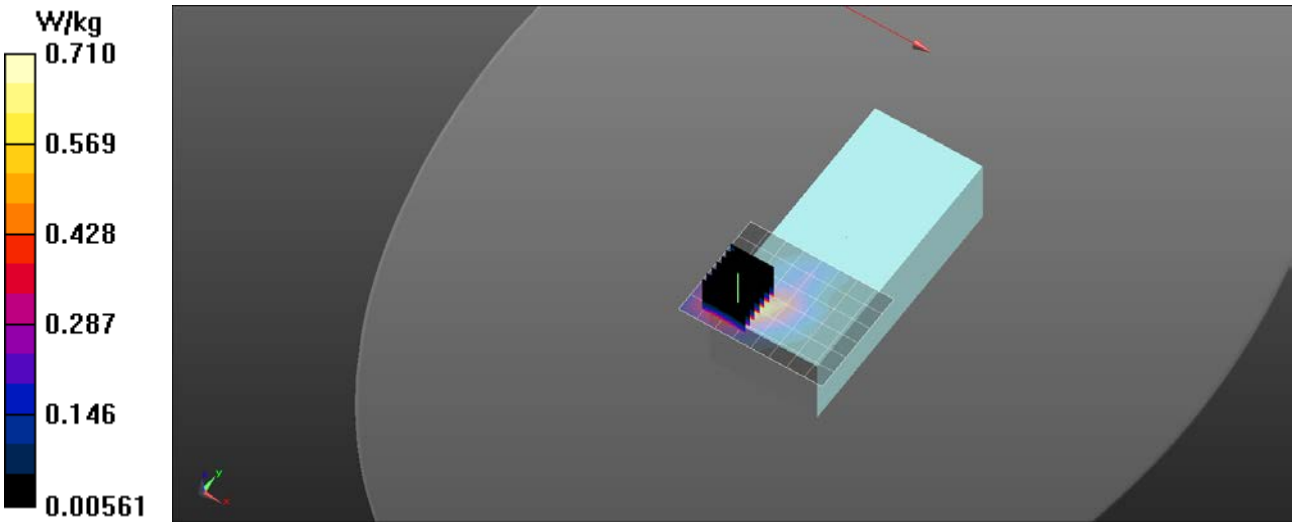

This report shall not be reproduced except in full without the written approval of RF Exposure Lab, LLC.

RF Exposure Lab

Plot 11

DUT: A720X; Type: Handheld Reader; Serial: 7518200141

Communication System: WiFi 802.11a (OFDM, 6 Mbps) 60% DC; Frequency: 5785 MHz; Duty Cycle: 1:1.65959
Medium: MSL 3-6 GHz; Medium parameters used (interpolated): f = 5785 MHz; σ = 6.033 S/m; ε_r = 48.08; ρ = 1000 kg/m^3
Phantom section: Flat Section

Test Date: Date: 6/20/2018; Ambient Temp: 23 °C; Tissue Temp: 21 °C

Probe: EX3DV4 - SN3693; ConvF(4.21, 4.21, 4.21); Calibrated: 8/18/2017;
Sensor-Surface: 2mm (Mechanical Surface Detection)
Electronics: DAE4 Sn759; Calibrated: 8/21/2017
Phantom: ELI v5.0; Type: QDOVA002AA; Serial: 1251
Measurement SW: DASY52, Version 52.10 (0); SEMCAD X Version 14.6.10 (7417)

Procedure Notes:

A720X 5800 MHz NA/Standard Side B 157/Area Scan (9x7x1): Measurement grid: dx=10mm, dy=10mm

Info: Interpolated medium parameters used for SAR evaluation.
Maximum value of SAR (measured) = 1.04 W/kg

A720X 5800 MHz NA/Standard Side B 157/Zoom Scan (7x7x12)/Cube 0: Measurement grid: dx=4mm, dy=4mm, dz=2mm
Reference Value = 4.349 V/m; Power Drift = 0.02 dB
Peak SAR (extrapolated) = 3.06 W/kg
SAR(1 g) = 0.417 W/kg

Info: Interpolated medium parameters used for SAR evaluation.
Maximum value of SAR (measured) = 1.37 W/kg

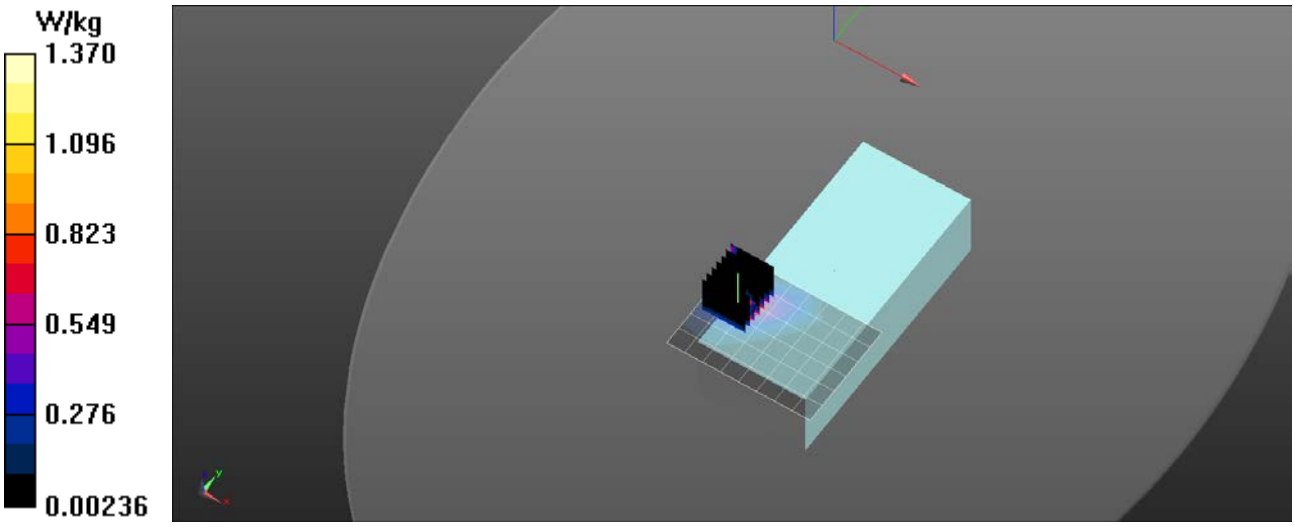

© 2018 RF Exposure Lab, LLC

This report shall not be reproduced except in full without the written approval of RF Exposure Lab, LLC.

RF Exposure Lab

Plot 12

DUT: A730X; Type: Handheld Reader; Serial: 7618230017

Communication System: WiFi 802.11a (OFDM, 6 Mbps) 60% DC; Frequency: 5785 MHz; Duty Cycle: 1:1.65959
Medium: MSL 3-6 GHz; Medium parameters used (interpolated): f = 5785 MHz; σ = 6.033 S/m; ε_r = 48.08; ρ = 1000 kg/m^3
Phantom section: Flat Section

Test Date: Date: 6/21/2018; Ambient Temp: 23 °C; Tissue Temp: 21 °C

Probe: EX3DV4 - SN3693; ConvF(4.21, 4.21, 4.21); Calibrated: 8/18/2017;
Sensor-Surface: 2mm (Mechanical Surface Detection)
Electronics: DAE4 Sn759; Calibrated: 8/21/2017
Phantom: ELI v5.0; Type: QDOVA002AA; Serial: 1251
Measurement SW: DASY52, Version 52.10 (0); SEMCAD X Version 14.6.10 (7417)

Procedure Notes:

A730X 5800 MHz NA/Standard Side B 157/Area Scan (9x7x1): Measurement grid: dx=10mm, dy=10mm

Info: Interpolated medium parameters used for SAR evaluation.
Maximum value of SAR (measured) = 1.22 W/kg

A730X 5800 MHz NA/Standard Side B 157/Zoom Scan (7x7x12)/Cube 0: Measurement grid: dx=4mm, dy=4mm, dz=2mm
Reference Value = 2.708 V/m; Power Drift = -0.03 dB
Peak SAR (extrapolated) = 2.32 W/kg
SAR(1 g) = 0.682 W/kg

Info: Interpolated medium parameters used for SAR evaluation.
Maximum value of SAR (measured) = 1.34 W/kg

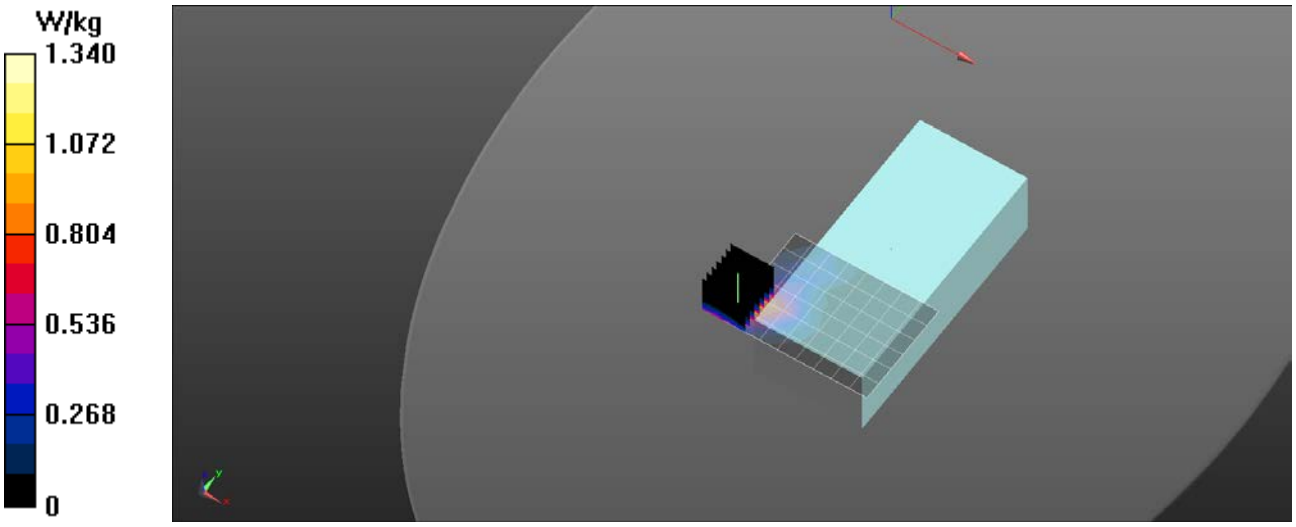

This report shall not be reproduced except in full without the written approval of RF Exposure Lab, LLC.

Appendix D – Probe Calibration Data Sheets

This report shall not be reproduced except in full without the written approval of RF Exposure Lab, LLC.

Jm

Calibration Laboratory of
Schmid & Partner
Engineering AG
Zeughausstrasse 43, 8004 Zurich, Switzerland

S Schweizerischer Kalibrierdienst
C Service suisse d'étalonnage
Servizio svizzero di taratura
S Swiss Calibration Service

Accredited by the Swiss Accreditation Service (SAS)
The Swiss Accreditation Service is one of the signatories to the EA Multilateral Agreement for the recognition of calibration certificates

Accreditation No.: SCS 0108

Client RF Exposure Lab

Certificate No: EX3-3693_Aug17

CALIBRATION CERTIFICATE

Object	EX3DV4 - SN:3693
Calibration procedure(s)	QA CAL-01.v9, QA CAL-12.v9, QA CAL-14.v4, QA CAL-23.v5, QA CAL-25.v6 Calibration procedure for dosimetric E-field probes
Calibration date:	August 18, 2017

This calibration certificate documents the traceability to national standards, which realize the physical units of measurements (SI).
The measurements and the uncertainties with confidence probability are given on the following pages and are part of the certificate.

All calibrations have been conducted in the closed laboratory facility: environment temperature (22 ± 3)°C and humidity < 70%.

Calibration Equipment used (M&TE critical for calibration)

Primary Standards	ID	Cal Date (Certificate No.)	Scheduled Calibration
Power meter NRP	SN: 104778	04-Apr-17 (No. 217-02521/02522)	Apr-18
Power sensor NRP-Z91	SN: 103244	04-Apr-17 (No. 217-02521)	Apr-18
Power sensor NRP-Z91	SN: 103245	04-Apr-17 (No. 217-02525)	Apr-18
Reference 20 dB Attenuator	SN: S5277 (20x)	07-Apr-17 (No. 217-02528)	Apr-18
Reference Probe ES3DV2	SN: 3013	31-Dec-16 (No. ES3-3013_Dec16)	Dec-17
DAE4	SN: 660	7-Dec-16 (No. DAE4-660_Dec16)	Dec-17
Secondary Standards	ID	Check Date (in house)	Scheduled Check
Power meter E4419B	SN: GB41293874	06-Apr-16 (in house check Jun-16)	In house check: Jun-18
Power sensor E4412A	SN: MY41498087	06-Apr-16 (in house check Jun-16)	In house check: Jun-18
Power sensor E4412A	SN: 000110210	06-Apr-16 (in house check Jun-16)	In house check: Jun-18
RF generator HP 8648C	SN: US3642U01700	04-Aug-99 (in house check Jun-16)	In house check: Jun-18
Network Analyzer HP 8753E	SN: US37390585	18-Oct-01 (in house check Oct-16)	In house check: Oct-17

	Name	Function	Signature
Calibrated by:	Jeton Kastrati	Laboratory Technician	
Approved by:	Katja Pokovic	Technical Manager	

Issued: August 22, 2017

This calibration certificate shall not be reproduced except in full without written approval of the laboratory.

Glossary:

TSL	tissue simulating liquid
NORMx,y,z	sensitivity in free space
ConvF	sensitivity in TSL / NORMx,y,z
DCP	diode compression point
CF	crest factor (1/duty_cycle) of the RF signal
A, B, C, D	modulation dependent linearization parameters
Polarization φ	φ rotation around probe axis
Polarization ϑ	ϑ rotation around an axis that is in the plane normal to probe axis (at measurement center), i.e., ϑ = 0 is normal to probe axis
Connector Angle	information used in DASY system to align probe sensor X to the robot coordinate system

Calibration is Performed According to the Following Standards:

a) IEEE Std 1528-2013, "IEEE Recommended Practice for Determining the Peak Spatial-Averaged Specific Absorption Rate (SAR) in the Human Head from Wireless Communications Devices: Measurement Techniques", June 2013
b) IEC 62209-1, ", "Measurement procedure for the assessment of Specific Absorption Rate (SAR) from hand-held and body-mounted devices used next to the ear (frequency range of 300 MHz to 6 GHz)", July 2016
c) IEC 62209-2, "Procedure to determine the Specific Absorption Rate (SAR) for wireless communication devices used in close proximity to the human body (frequency range of 30 MHz to 6 GHz)", March 2010
d) KDB 865664, "SAR Measurement Requirements for 100 MHz to 6 GHz"

Methods Applied and Interpretation of Parameters:

- *NORMx,y,z:* Assessed for E-field polarization ϑ = 0 (f ≤ 900 MHz in TEM-cell; f > 1800 MHz: R22 waveguide). NORMx,y,z are only intermediate values, i.e., the uncertainties of NORMx,y,z does not affect the E^2-field uncertainty inside TSL (see below *ConvF*).
- *NORM(f)x,y,z = NORMx,y,z * frequency_response* (see Frequency Response Chart). This linearization is implemented in DASY4 software versions later than 4.2. The uncertainty of the frequency response is included in the stated uncertainty of *ConvF*.
- *DCPx,y,z:* DCP are numerical linearization parameters assessed based on the data of power sweep with CW signal (no uncertainty required). DCP does not depend on frequency nor media.
- *PAR:* PAR is the Peak to Average Ratio that is not calibrated but determined based on the signal characteristics
- *Ax,y,z; Bx,y,z; Cx,y,z; Dx,y,z; VRx,y,z: A, B, C, D* are numerical linearization parameters assessed based on the data of power sweep for specific modulation signal. The parameters do not depend on frequency nor media. *VR* is the maximum calibration range expressed in RMS voltage across the diode.
- *ConvF and Boundary Effect Parameters:* Assessed in flat phantom using E-field (or Temperature Transfer Standard for f ≤ 800 MHz) and inside waveguide using analytical field distributions based on power measurements for f > 800 MHz. The same setups are used for assessment of the parameters applied for boundary compensation (alpha, depth) of which typical uncertainty values are given. These parameters are used in DASY4 software to improve probe accuracy close to the boundary. The sensitivity in TSL corresponds to *NORMx,y,z * ConvF* whereby the uncertainty corresponds to that given for *ConvF*. A frequency dependent *ConvF* is used in DASY version 4.4 and higher which allows extending the validity from ± 50 MHz to ± 100 MHz.
- *Spherical isotropy (3D deviation from isotropy)*: in a field of low gradients realized using a flat phantom exposed by a patch antenna.
- *Sensor Offset*: The sensor offset corresponds to the offset of virtual measurement center from the probe tip (on probe axis). No tolerance required.
- *Connector Angle*: The angle is assessed using the information gained by determining the *NORMx* (no uncertainty required).

Probe EX3DV4

SN:3693

Manufactured: April 22, 2009
Calibrated: August 18, 2017

Calibrated for DASY/EASY Systems
(Note: non-compatible with DASY2 system!)

DASY/EASY - Parameters of Probe: EX3DV4 - SN:3693

Basic Calibration Parameters

	Sensor X	Sensor Y	Sensor Z	Unc (k=2)
Norm ($\mu V/(V/m)^2$)[A]	0.39	0.32	0.35	± 10.1 %
DCP (mV)[B]	95.1	97.9	107.8	

Modulation Calibration Parameters

UID	Communication System Name		A dB	B dB$\sqrt{\mu V}$	C	D dB	VR mV	Unc[E] (k=2)
0	CW	X	0.0	0.0	1.0	0.00	153.2	±3.5 %
		Y	0.0	0.0	1.0		144.5	
		Z	0.0	0.0	1.0		151.4	

Note: For details on UID parameters see Appendix.

Sensor Model Parameters

	C1 fF	C2 fF	α V^{-1}	T1 $ms.V^{-2}$	T2 $ms.V^{-1}$	T3 ms	T4 V^{-2}	T5 V^{-1}	T6
X	33.42	257.2	37.63	9.549	1.014	5.071	0	0.481	1.008
Y	36.13	269.4	35.53	11.22	0.702	5.041	0.308	0.41	1.005
Z	28.36	204.6	33.61	4.581	0.465	5.032	0.705	0.298	1.004

The reported uncertainty of measurement is stated as the standard uncertainty of measurement multiplied by the coverage factor k=2, which for a normal distribution corresponds to a coverage probability of approximately 95%.

[A] The uncertainties of Norm X,Y,Z do not affect the E^2-field uncertainty inside TSL (see Pages 5 and 6).
[B] Numerical linearization parameter: uncertainty not required.
[E] Uncertainty is determined using the max. deviation from linear response applying rectangular distribution and is expressed for the square of the field value.

DASY/EASY - Parameters of Probe: EX3DV4 - SN:3693

Calibration Parameter Determined in Head Tissue Simulating Media

f (MHz) [C]	Relative Permittivity [F]	Conductivity (S/m) [F]	ConvF X	ConvF Y	ConvF Z	Alpha [G]	Depth [G] (mm)	Unc (k=2)
150	52.3	0.76	11.31	11.31	11.31	0.00	1.00	± 13.3 %
220	49.0	0.81	10.54	10.54	10.54	0.00	1.00	± 13.3 %
450	43.5	0.87	9.78	9.78	9.78	0.13	1.60	± 13.3 %
750	41.9	0.89	9.55	9.55	9.55	0.36	1.03	± 12.0 %
1750	40.1	1.37	8.15	8.15	8.15	0.28	0.85	± 12.0 %
1900	40.0	1.40	7.85	7.85	7.85	0.30	0.85	± 12.0 %
2300	39.5	1.67	7.44	7.44	7.44	0.38	0.85	± 12.0 %
2450	39.2	1.80	7.05	7.05	7.05	0.31	0.84	± 12.0 %
5200	36.0	4.66	5.09	5.09	5.09	0.35	1.80	± 13.1 %
5300	35.9	4.76	4.83	4.83	4.83	0.35	1.80	± 13.1 %
5500	35.6	4.96	4.85	4.85	4.85	0.40	1.80	± 13.1 %
5600	35.5	5.07	4.70	4.70	4.70	0.40	1.80	± 13.1 %
5800	35.3	5.27	4.65	4.65	4.65	0.40	1.80	± 13.1 %

[C] Frequency validity above 300 MHz of ± 100 MHz only applies for DASY v4.4 and higher (see Page 2), else it is restricted to ± 50 MHz. The uncertainty is the RSS of the ConvF uncertainty at calibration frequency and the uncertainty for the indicated frequency band. Frequency validity below 300 MHz is ± 10, 25, 40, 50 and 70 MHz for ConvF assessments at 30, 64, 128, 150 and 220 MHz respectively. Above 5 GHz frequency validity can be extended to ± 110 MHz.

[F] At frequencies below 3 GHz, the validity of tissue parameters (ε and σ) can be relaxed to ± 10% if liquid compensation formula is applied to measured SAR values. At frequencies above 3 GHz, the validity of tissue parameters (ε and σ) is restricted to ± 5%. The uncertainty is the RSS of the ConvF uncertainty for indicated target tissue parameters.

[G] Alpha/Depth are determined during calibration. SPEAG warrants that the remaining deviation due to the boundary effect after compensation is always less than ± 1% for frequencies below 3 GHz and below ± 2% for frequencies between 3-6 GHz at any distance larger than half the probe tip diameter from the boundary.

DASY/EASY - Parameters of Probe: EX3DV4 - SN:3693

Calibration Parameter Determined in Body Tissue Simulating Media

f (MHz) [C]	Relative Permittivity [F]	Conductivity (S/m) [F]	ConvF X	ConvF Y	ConvF Z	Alpha [G]	Depth [G] (mm)	Unc (k=2)
150	61.9	0.80	10.76	10.76	10.76	0.00	1.00	± 13.3 %
220	60.2	0.86	10.08	10.08	10.08	0.00	1.00	± 13.3 %
450	56.7	0.94	10.19	10.19	10.19	0.10	1.30	± 13.3 %
750	55.5	0.96	9.35	9.35	9.35	0.50	0.85	± 12.0 %
1750	53.4	1.49	7.77	7.77	7.77	0.37	0.85	± 12.0 %
1900	53.3	1.52	7.54	7.54	7.54	0.30	0.96	± 12.0 %
2300	52.9	1.81	7.41	7.41	7.41	0.38	0.84	± 12.0 %
2450	52.7	1.95	7.26	7.26	7.26	0.34	0.89	± 12.0 %
5200	49.0	5.30	4.70	4.70	4.70	0.35	1.90	± 13.1 %
5300	48.9	5.42	4.46	4.46	4.46	0.40	1.90	± 13.1 %
5500	48.6	5.65	4.04	4.04	4.04	0.40	1.90	± 13.1 %
5600	48.5	5.77	4.00	4.00	4.00	0.40	1.90	± 13.1 %
5800	48.2	6.00	4.21	4.21	4.21	0.40	1.90	± 13.1 %

[C] Frequency validity above 300 MHz of ± 100 MHz only applies for DASY v4.4 and higher (see Page 2), else it is restricted to ± 50 MHz. The uncertainty is the RSS of the ConvF uncertainty at calibration frequency and the uncertainty for the indicated frequency band. Frequency validity below 300 MHz is ± 10, 25, 40, 50 and 70 MHz for ConvF assessments at 30, 64, 128, 150 and 220 MHz respectively. Above 5 GHz frequency validity can be extended to ± 110 MHz.

[F] At frequencies below 3 GHz, the validity of tissue parameters (ε and σ) can be relaxed to ± 10% if liquid compensation formula is applied to measured SAR values. At frequencies above 3 GHz, the validity of tissue parameters (ε and σ) is restricted to ± 5%. The uncertainty is the RSS of the ConvF uncertainty for indicated target tissue parameters.

[G] Alpha/Depth are determined during calibration. SPEAG warrants that the remaining deviation due to the boundary effect after compensation is always less than ± 1% for frequencies below 3 GHz and below ± 2% for frequencies between 3-6 GHz at any distance larger than half the probe tip diameter from the boundary.

Frequency Response of E-Field

(TEM-Cell:ifi110 EXX, Waveguide: R22)

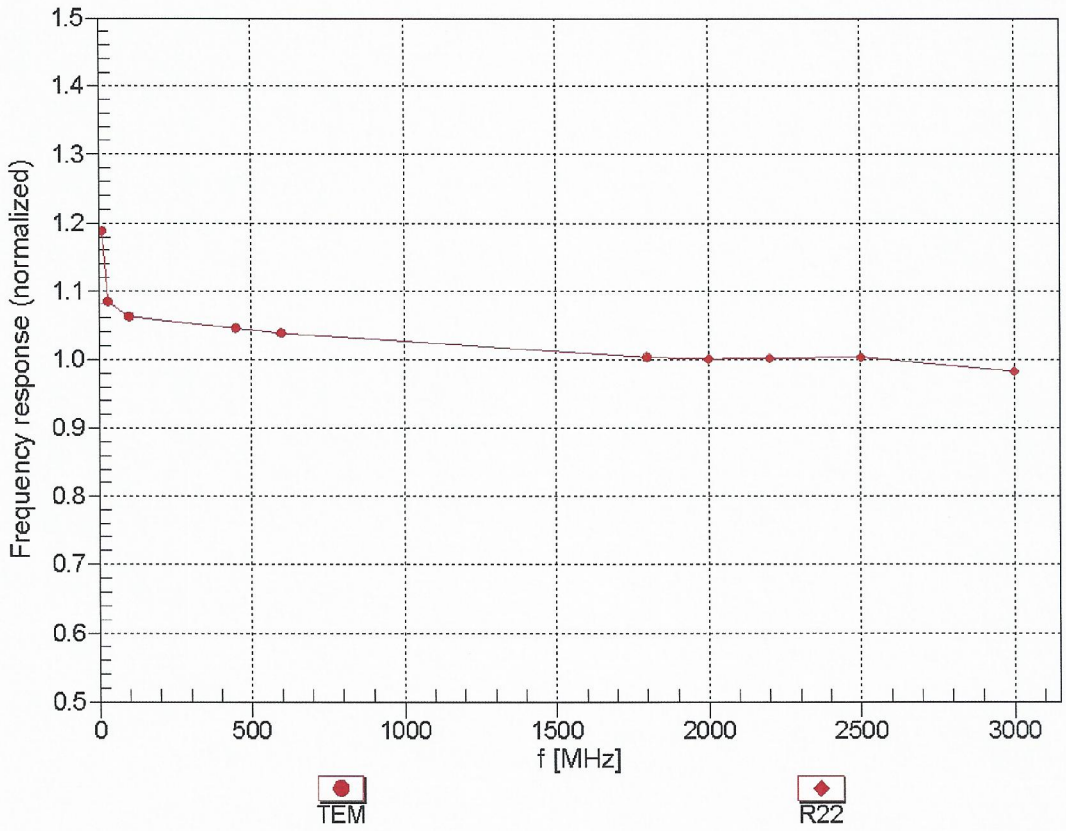

Uncertainty of Frequency Response of E-field: ± 6.3% (k=2)

Receiving Pattern (ϕ), ϑ = 0°

f=600 MHz,TEM

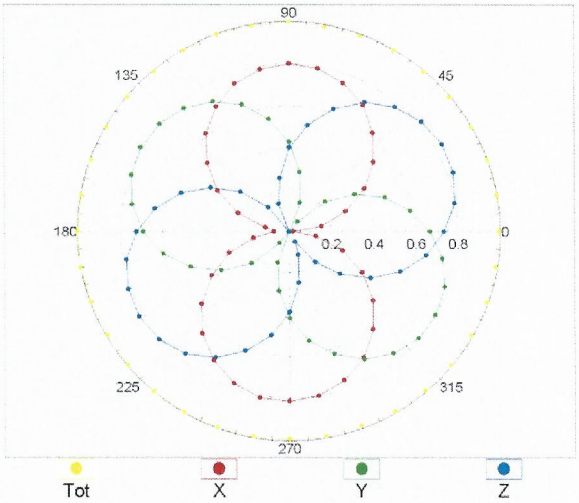

f=1800 MHz,R22

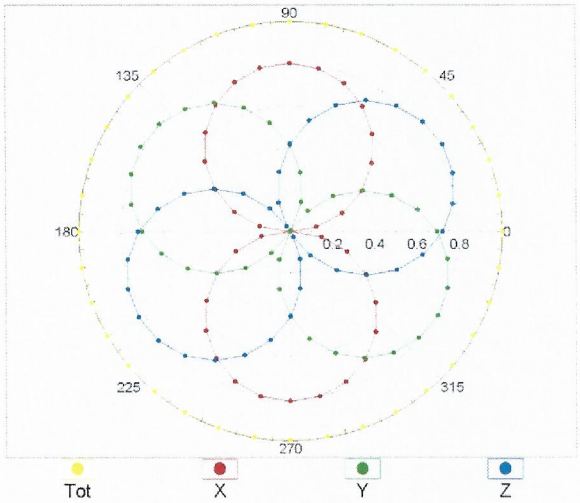

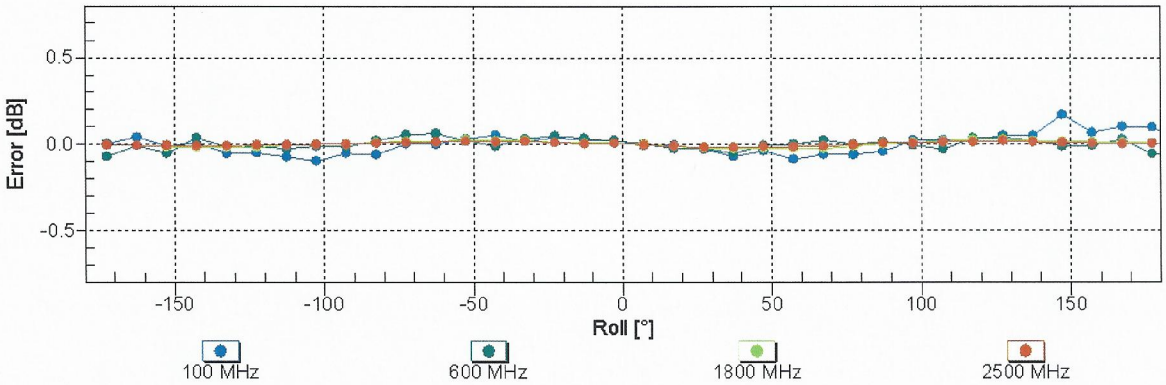

Uncertainty of Axial Isotropy Assessment: ± 0.5% (k=2)

Dynamic Range f(SAR_{head})

(TEM cell , f_{eval}= 1900 MHz)

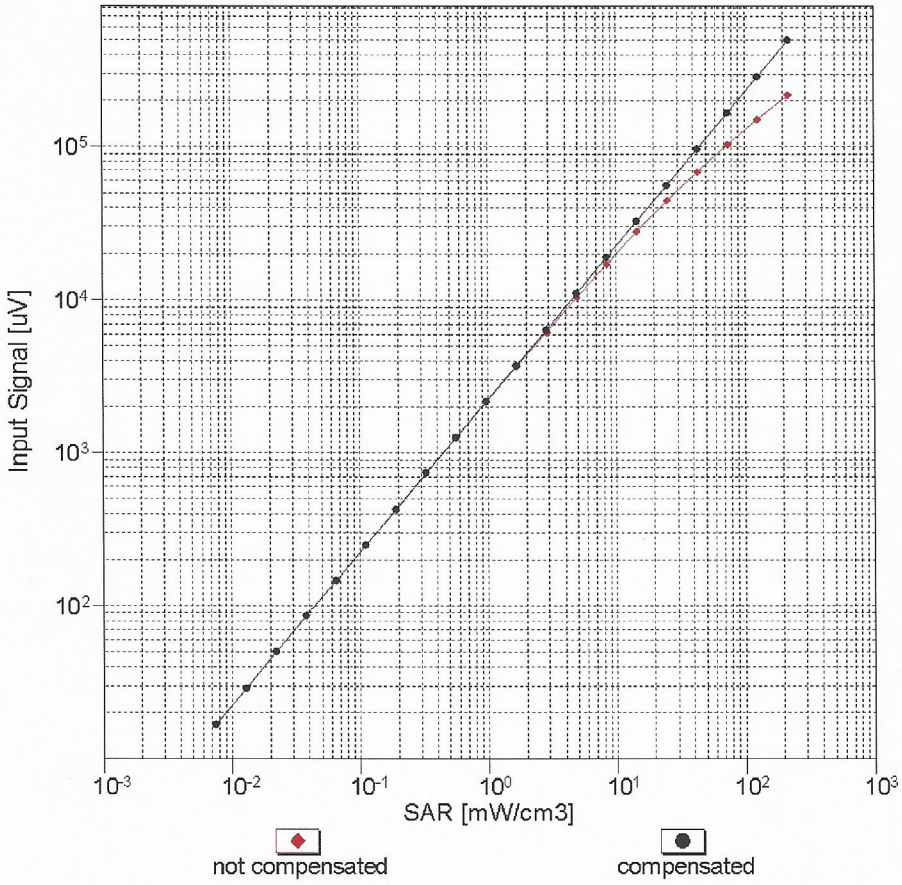

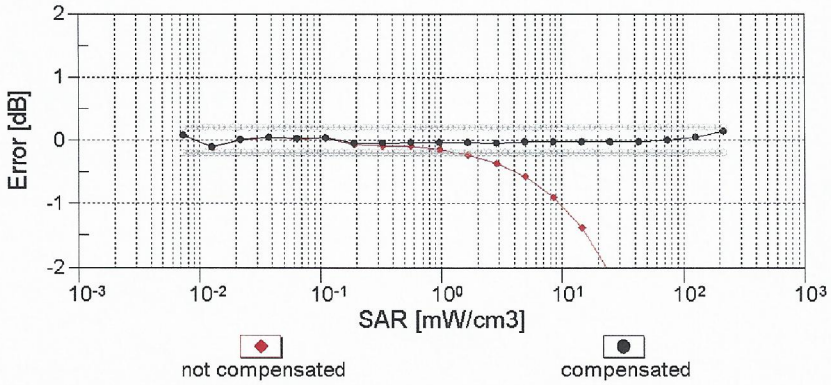

Uncertainty of Linearity Assessment: ± 0.6% (k=2)

Conversion Factor Assessment

f = 750 MHz,WGLS R9 (H_convF)

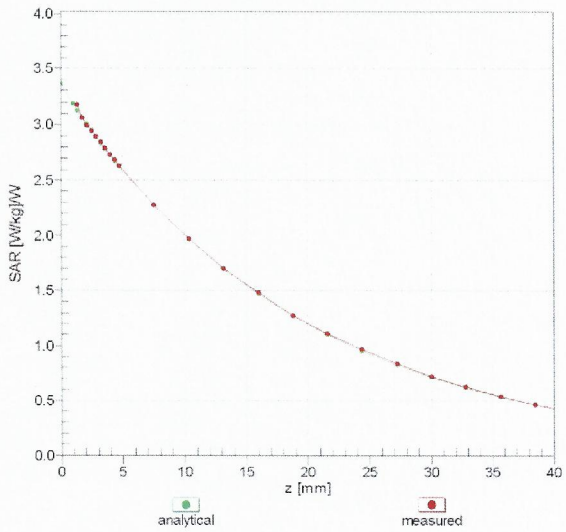

f = 1900 MHz,WGLS R22 (H_convF)

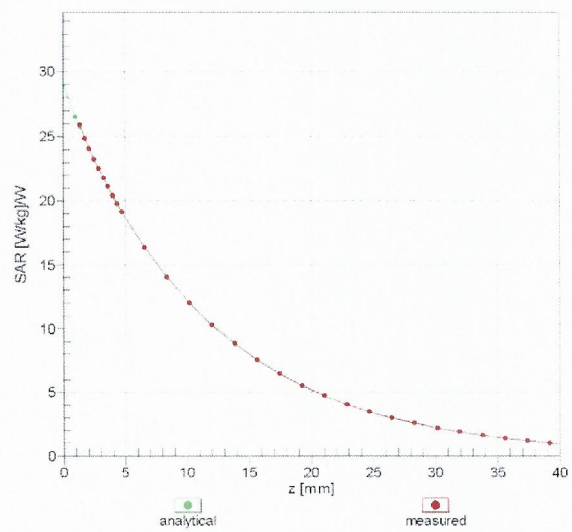

Deviation from Isotropy in Liquid

Error (ϕ, ϑ), f = 900 MHz

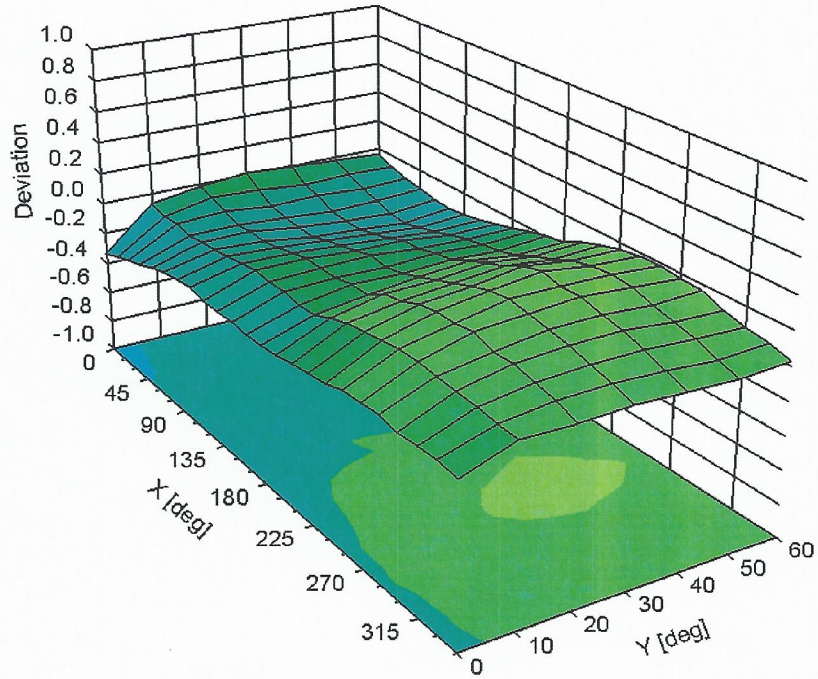

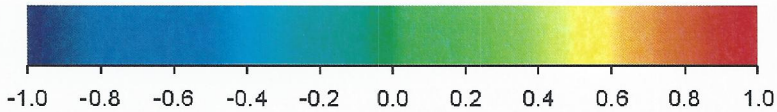

Uncertainty of Spherical Isotropy Assessment: ± 2.6% (k=2)

DASY/EASY - Parameters of Probe: EX3DV4 - SN:3693

Other Probe Parameters

Sensor Arrangement	Triangular
Connector Angle (°)	107.3
Mechanical Surface Detection Mode	enabled
Optical Surface Detection Mode	disabled
Probe Overall Length	337 mm
Probe Body Diameter	10 mm
Tip Length	9 mm
Tip Diameter	2.5 mm
Probe Tip to Sensor X Calibration Point	1 mm
Probe Tip to Sensor Y Calibration Point	1 mm
Probe Tip to Sensor Z Calibration Point	1 mm
Recommended Measurement Distance from Surface	1.4 mm

Appendix: Modulation Calibration Parameters

UID	Communication System Name		A dB	B dB√μV	C	D dB	VR mV	Max Unc[E] (k=2)
0	CW	X	0.00	0.00	1.00	0.00	153.2	± 3.5 %
		Y	0.00	0.00	1.00		144.5	
		Z	0.00	0.00	1.00		151.4	
10010-CAA	SAR Validation (Square, 100ms, 10ms)	X	2.46	65.57	10.33	10.00	20.0	± 9.6 %
		Y	2.58	66.85	10.94		20.0	
		Z	1.86	62.99	8.17		20.0	
10011-CAB	UMTS-FDD (WCDMA)	X	0.96	69.29	15.51	0.00	150.0	± 9.6 %
		Y	0.93	66.88	14.68		150.0	
		Z	0.96	69.60	15.68		150.0	
10012-CAB	IEEE 802.11b WiFi 2.4 GHz (DSSS, 1 Mbps)	X	1.07	64.52	15.65	0.41	150.0	± 9.6 %
		Y	1.12	63.74	15.00		150.0	
		Z	1.05	64.42	15.37		150.0	
10013-CAB	IEEE 802.11g WiFi 2.4 GHz (DSSS-OFDM, 6 Mbps)	X	4.64	67.04	17.28	1.46	150.0	± 9.6 %
		Y	4.69	66.78	16.99		150.0	
		Z	4.48	67.08	16.97		150.0	
10021-DAC	GSM-FDD (TDMA, GMSK)	X	100.00	113.55	27.40	9.39	50.0	± 9.6 %
		Y	100.00	113.18	27.01		50.0	
		Z	100.00	106.64	23.61		50.0	
10023-DAC	GPRS-FDD (TDMA, GMSK, TN 0)	X	100.00	113.06	27.24	9.57	50.0	± 9.6 %
		Y	100.00	112.70	26.84		50.0	
		Z	32.97	94.20	20.54		50.0	
10024-DAC	GPRS-FDD (TDMA, GMSK, TN 0-1)	X	100.00	111.50	25.18	6.56	60.0	± 9.6 %
		Y	100.00	111.79	25.25		60.0	
		Z	100.00	104.88	21.52		60.0	
10025-DAC	EDGE-FDD (TDMA, 8PSK, TN 0)	X	3.89	66.96	23.84	12.57	50.0	± 9.6 %
		Y	4.25	70.19	25.75		50.0	
		Z	3.28	63.68	21.63		50.0	
10026-DAC	EDGE-FDD (TDMA, 8PSK, TN 0-1)	X	8.05	89.16	31.60	9.56	60.0	± 9.6 %
		Y	7.77	88.25	31.17		60.0	
		Z	5.87	82.94	28.96		60.0	
10027-DAC	GPRS-FDD (TDMA, GMSK, TN 0-1-2)	X	100.00	110.68	23.90	4.80	80.0	± 9.6 %
		Y	100.00	112.16	24.62		80.0	
		Z	100.00	104.54	20.49		80.0	
10028-DAC	GPRS-FDD (TDMA, GMSK, TN 0-1-2-3)	X	100.00	109.55	22.62	3.55	100.0	± 9.6 %
		Y	100.00	113.50	24.48		100.0	
		Z	100.00	104.05	19.54		100.0	
10029-DAC	EDGE-FDD (TDMA, 8PSK, TN 0-1-2)	X	5.29	80.16	27.01	7.80	80.0	± 9.6 %
		Y	5.14	79.09	26.35		80.0	
		Z	3.96	74.93	24.59		80.0	
10030-CAA	IEEE 802.15.1 Bluetooth (GFSK, DH1)	X	100.00	108.68	23.35	5.30	70.0	± 9.6 %
		Y	100.00	109.67	23.80		70.0	
		Z	100.00	101.79	19.60		70.0	
10031-CAA	IEEE 802.15.1 Bluetooth (GFSK, DH3)	X	0.42	62.17	5.93	1.88	100.0	± 9.6 %
		Y	100.00	107.91	20.81		100.0	
		Z	0.20	60.00	3.98		100.0	

10032-CAA	IEEE 802.15.1 Bluetooth (GFSK, DH5)	X	0.21	60.00	3.06	1.17	100.0	± 9.6 %
		Y	100.00	108.51	20.18		100.0	
		Z	17.50	60.55	1.43		100.0	
10033-CAA	IEEE 802.15.1 Bluetooth (PI/4-DQPSK, DH1)	X	26.75	102.90	26.12	5.30	70.0	± 9.6 %
		Y	11.41	91.98	23.49		70.0	
		Z	8.40	86.52	20.27		70.0	
10034-CAA	IEEE 802.15.1 Bluetooth (PI/4-DQPSK, DH3)	X	3.04	75.65	15.32	1.88	100.0	± 9.6 %
		Y	2.84	75.48	16.17		100.0	
		Z	1.44	68.36	11.69		100.0	
10035-CAA	IEEE 802.15.1 Bluetooth (PI/4-DQPSK, DH5)	X	1.53	69.13	12.32	1.17	100.0	± 9.6 %
		Y	1.81	71.22	14.21		100.0	
		Z	0.97	65.45	10.03		100.0	
10036-CAA	IEEE 802.15.1 Bluetooth (8-DPSK, DH1)	X	68.65	116.35	29.55	5.30	70.0	± 9.6 %
		Y	17.31	98.26	25.40		70.0	
		Z	14.64	93.89	22.52		70.0	
10037-CAA	IEEE 802.15.1 Bluetooth (8-DPSK, DH3)	X	2.53	73.73	14.61	1.88	100.0	± 9.6 %
		Y	2.51	74.11	15.65		100.0	
		Z	1.27	67.18	11.19		100.0	
10038-CAA	IEEE 802.15.1 Bluetooth (8-DPSK, DH5)	X	1.60	69.92	12.78	1.17	100.0	± 9.6 %
		Y	1.84	71.62	14.51		100.0	
		Z	0.99	65.91	10.38		100.0	
10039-CAB	CDMA2000 (1xRTT, RC1)	X	0.74	63.41	8.92	0.00	150.0	± 9.6 %
		Y	1.23	68.14	12.51		150.0	
		Z	0.60	62.45	7.98		150.0	
10042-CAB	IS-54 / IS-136 FDD (TDMA/FDM, PI/4-DQPSK, Halfrate)	X	100.00	108.18	24.00	7.78	50.0	± 9.6 %
		Y	100.00	108.88	24.22		50.0	
		Z	10.97	81.94	15.63		50.0	
10044-CAA	IS-91/EIA/TIA-553 FDD (FDMA, FM)	X	0.00	65.90	22.17	0.00	150.0	± 9.6 %
		Y	0.01	122.92	0.71		150.0	
		Z	0.13	128.48	4.69		150.0	
10048-CAA	DECT (TDD, TDMA/FDM, GFSK, Full Slot, 24)	X	14.87	85.35	21.09	13.80	25.0	± 9.6 %
		Y	23.17	91.69	22.64		25.0	
		Z	6.22	71.44	14.68		25.0	
10049-CAA	DECT (TDD, TDMA/FDM, GFSK, Double Slot, 12)	X	24.31	94.02	22.62	10.79	40.0	± 9.6 %
		Y	43.77	101.49	24.30		40.0	
		Z	6.49	74.97	14.88		40.0	
10056-CAA	UMTS-TDD (TD-SCDMA, 1.28 Mcps)	X	18.56	94.19	24.49	9.03	50.0	± 9.6 %
		Y	19.55	95.88	25.17		50.0	
		Z	13.54	87.88	21.18		50.0	
10058-DAC	EDGE-FDD (TDMA, 8PSK, TN 0-1-2-3)	X	4.17	75.85	24.49	6.55	100.0	± 9.6 %
		Y	4.09	74.81	23.76		100.0	
		Z	3.25	71.57	22.39		100.0	
10059-CAB	IEEE 802.11b WiFi 2.4 GHz (DSSS, 2 Mbps)	X	1.13	66.04	16.48	0.61	110.0	± 9.6 %
		Y	1.16	64.80	15.58		110.0	
		Z	1.07	65.37	15.92		110.0	
10060-CAB	IEEE 802.11b WiFi 2.4 GHz (DSSS, 5.5 Mbps)	X	100.00	137.72	34.95	1.30	110.0	± 9.6 %
		Y	14.15	108.54	28.54		110.0	
		Z	100.00	142.16	36.45		110.0	

10061-CAB	IEEE 802.11b WiFi 2.4 GHz (DSSS, 11 Mbps)	X	5.68	93.99	26.90	2.04	110.0	± 9.6 %
		Y	2.72	79.85	21.80		110.0	
		Z	2.32	80.40	22.21		110.0	
10062-CAB	IEEE 802.11a/h WiFi 5 GHz (OFDM, 6 Mbps)	X	4.40	66.89	16.61	0.49	100.0	± 9.6 %
		Y	4.48	66.72	16.41		100.0	
		Z	4.27	67.05	16.40		100.0	
10063-CAB	IEEE 802.11a/h WiFi 5 GHz (OFDM, 9 Mbps)	X	4.43	67.03	16.74	0.72	100.0	± 9.6 %
		Y	4.50	66.82	16.51		100.0	
		Z	4.29	67.16	16.50		100.0	
10064-CAB	IEEE 802.11a/h WiFi 5 GHz (OFDM, 12 Mbps)	X	4.66	67.22	16.93	0.86	100.0	± 9.6 %
		Y	4.74	67.02	16.71		100.0	
		Z	4.50	67.31	16.67		100.0	
10065-CAB	IEEE 802.11a/h WiFi 5 GHz (OFDM, 18 Mbps)	X	4.55	67.11	17.04	1.21	100.0	± 9.6 %
		Y	4.62	66.89	16.79		100.0	
		Z	4.38	67.12	16.73		100.0	
10066-CAB	IEEE 802.11a/h WiFi 5 GHz (OFDM, 24 Mbps)	X	4.57	67.14	17.22	1.46	100.0	± 9.6 %
		Y	4.64	66.91	16.95		100.0	
		Z	4.38	67.08	16.86		100.0	
10067-CAB	IEEE 802.11a/h WiFi 5 GHz (OFDM, 36 Mbps)	X	4.87	67.48	17.74	2.04	100.0	± 9.6 %
		Y	4.93	67.19	17.44		100.0	
		Z	4.65	67.30	17.29		100.0	
10068-CAB	IEEE 802.11a/h WiFi 5 GHz (OFDM, 48 Mbps)	X	4.92	67.43	17.92	2.55	100.0	± 9.6 %
		Y	4.97	67.13	17.61		100.0	
		Z	4.70	67.27	17.49		100.0	
10069-CAB	IEEE 802.11a/h WiFi 5 GHz (OFDM, 54 Mbps)	X	4.98	67.46	18.11	2.67	100.0	± 9.6 %
		Y	5.04	67.15	17.79		100.0	
		Z	4.74	67.23	17.63		100.0	
10071-CAB	IEEE 802.11g WiFi 2.4 GHz (DSSS/OFDM, 9 Mbps)	X	4.75	67.16	17.60	1.99	100.0	± 9.6 %
		Y	4.79	66.87	17.29		100.0	
		Z	4.57	67.14	17.25		100.0	
10072-CAB	IEEE 802.11g WiFi 2.4 GHz (DSSS/OFDM, 12 Mbps)	X	4.72	67.47	17.83	2.30	100.0	± 9.6 %
		Y	4.76	67.14	17.49		100.0	
		Z	4.51	67.32	17.42		100.0	
10073-CAB	IEEE 802.11g WiFi 2.4 GHz (DSSS/OFDM, 18 Mbps)	X	4.81	67.75	18.22	2.83	100.0	± 9.6 %
		Y	4.83	67.34	17.84		100.0	
		Z	4.58	67.54	17.76		100.0	
10074-CAB	IEEE 802.11g WiFi 2.4 GHz (DSSS/OFDM, 24 Mbps)	X	4.84	67.77	18.41	3.30	100.0	± 9.6 %
		Y	4.84	67.30	18.00		100.0	
		Z	4.61	67.56	17.94		100.0	
10075-CAB	IEEE 802.11g WiFi 2.4 GHz (DSSS/OFDM, 36 Mbps)	X	4.88	67.82	18.68	3.82	90.0	± 9.6 %
		Y	4.87	67.35	18.27		90.0	
		Z	4.64	67.56	18.18		90.0	
10076-CAB	IEEE 802.11g WiFi 2.4 GHz (DSSS/OFDM, 48 Mbps)	X	4.93	67.72	18.87	4.15	90.0	± 9.6 %
		Y	4.91	67.23	18.44		90.0	
		Z	4.68	67.42	18.33		90.0	
10077-CAB	IEEE 802.11g WiFi 2.4 GHz (DSSS/OFDM, 54 Mbps)	X	4.97	67.84	18.99	4.30	90.0	± 9.6 %
		Y	4.95	67.34	18.55		90.0	
		Z	4.72	67.54	18.46		90.0	

10081-CAB	CDMA2000 (1xRTT, RC3)	X	0.36	60.00	6.17	0.00	150.0	± 9.6 %
		Y	0.59	63.42	9.69		150.0	
		Z	0.32	60.00	5.85		150.0	
10082-CAB	IS-54 / IS-136 FDD (TDMA/FDM, PI/4-DQPSK, Fullrate)	X	0.70	60.00	4.28	4.77	80.0	± 9.6 %
		Y	0.71	60.00	4.47		80.0	
		Z	0.69	60.00	2.91		80.0	
10090-DAC	GPRS-FDD (TDMA, GMSK, TN 0-4)	X	100.00	111.63	25.26	6.56	60.0	± 9.6 %
		Y	100.00	111.84	25.29		60.0	
		Z	100.00	104.97	21.57		60.0	
10097-CAB	UMTS-FDD (HSDPA)	X	1.79	69.48	15.83	0.00	150.0	± 9.6 %
		Y	1.75	68.01	15.37		150.0	
		Z	1.85	70.58	16.07		150.0	
10098-CAB	UMTS-FDD (HSUPA, Subtest 2)	X	1.75	69.43	15.81	0.00	150.0	± 9.6 %
		Y	1.71	67.95	15.34		150.0	
		Z	1.81	70.51	16.05		150.0	
10099-DAC	EDGE-FDD (TDMA, 8PSK, TN 0-4)	X	8.10	89.27	31.64	9.56	60.0	± 9.6 %
		Y	7.82	88.37	31.21		60.0	
		Z	5.91	83.06	29.00		60.0	
10100-CAD	LTE-FDD (SC-FDMA, 100% RB, 20 MHz, QPSK)	X	2.93	70.65	16.93	0.00	150.0	± 9.6 %
		Y	2.91	69.88	16.50		150.0	
		Z	2.88	71.00	17.02		150.0	
10101-CAD	LTE-FDD (SC-FDMA, 100% RB, 20 MHz, 16-QAM)	X	3.00	67.51	15.97	0.00	150.0	± 9.6 %
		Y	3.06	67.25	15.75		150.0	
		Z	2.95	67.78	15.94		150.0	
10102-CAD	LTE-FDD (SC-FDMA, 100% RB, 20 MHz, 64-QAM)	X	3.11	67.54	16.09	0.00	150.0	± 9.6 %
		Y	3.17	67.28	15.86		150.0	
		Z	3.06	67.84	16.07		150.0	
10103-CAD	LTE-TDD (SC-FDMA, 100% RB, 20 MHz, QPSK)	X	6.12	76.61	21.08	3.98	65.0	± 9.6 %
		Y	6.02	75.69	20.46		65.0	
		Z	5.04	74.42	19.98		65.0	
10104-CAD	LTE-TDD (SC-FDMA, 100% RB, 20 MHz, 16-QAM)	X	5.76	73.36	20.41	3.98	65.0	± 9.6 %
		Y	5.82	73.01	20.04		65.0	
		Z	4.97	71.67	19.37		65.0	
10105-CAD	LTE-TDD (SC-FDMA, 100% RB, 20 MHz, 64-QAM)	X	5.43	72.01	20.10	3.98	65.0	± 9.6 %
		Y	5.60	72.12	19.94		65.0	
		Z	4.63	70.08	18.95		65.0	
10108-CAE	LTE-FDD (SC-FDMA, 100% RB, 10 MHz, QPSK)	X	2.52	70.18	16.82	0.00	150.0	± 9.6 %
		Y	2.51	69.21	16.32		150.0	
		Z	2.46	70.52	16.90		150.0	
10109-CAE	LTE-FDD (SC-FDMA, 100% RB, 10 MHz, 16-QAM)	X	2.65	67.63	15.85	0.00	150.0	± 9.6 %
		Y	2.71	67.20	15.60		150.0	
		Z	2.60	68.02	15.83		150.0	
10110-CAE	LTE-FDD (SC-FDMA, 100% RB, 5 MHz, QPSK)	X	2.00	69.56	16.26	0.00	150.0	± 9.6 %
		Y	2.00	68.38	15.78		150.0	
		Z	1.95	69.96	16.28		150.0	
10111-CAE	LTE-FDD (SC-FDMA, 100% RB, 5 MHz, 16-QAM)	X	2.44	69.32	16.14	0.00	150.0	± 9.6 %
		Y	2.45	68.42	15.85		150.0	
		Z	2.47	70.27	16.29		150.0	

10112-CAE	LTE-FDD (SC-FDMA, 100% RB, 10 MHz, 64-QAM)	X	2.78	67.70	15.93	0.00	150.0	± 9.6 %
		Y	2.84	67.29	15.69		150.0	
		Z	2.74	68.15	15.94		150.0	
10113-CAE	LTE-FDD (SC-FDMA, 100% RB, 5 MHz, 64-QAM)	X	2.59	69.51	16.30	0.00	150.0	± 9.6 %
		Y	2.60	68.63	16.01		150.0	
		Z	2.62	70.47	16.44		150.0	
10114-CAB	IEEE 802.11n (HT Greenfield, 13.5 Mbps, BPSK)	X	4.85	67.15	16.53	0.00	150.0	± 9.6 %
		Y	4.92	67.07	16.34		150.0	
		Z	4.74	67.31	16.39		150.0	
10115-CAB	IEEE 802.11n (HT Greenfield, 81 Mbps, 16-QAM)	X	5.09	67.20	16.55	0.00	150.0	± 9.6 %
		Y	5.17	67.14	16.39		150.0	
		Z	4.96	67.32	16.38		150.0	
10116-CAB	IEEE 802.11n (HT Greenfield, 135 Mbps, 64-QAM)	X	4.93	67.32	16.54	0.00	150.0	± 9.6 %
		Y	5.01	67.26	16.37		150.0	
		Z	4.80	67.45	16.39		150.0	
10117-CAB	IEEE 802.11n (HT Mixed, 13.5 Mbps, BPSK)	X	4.83	67.05	16.49	0.00	150.0	± 9.6 %
		Y	4.92	67.03	16.34		150.0	
		Z	4.72	67.21	16.36		150.0	
10118-CAB	IEEE 802.11n (HT Mixed, 81 Mbps, 16-QAM)	X	5.18	67.45	16.68	0.00	150.0	± 9.6 %
		Y	5.24	67.32	16.48		150.0	
		Z	5.01	67.45	16.45		150.0	
10119-CAB	IEEE 802.11n (HT Mixed, 135 Mbps, 64-QAM)	X	4.93	67.35	16.56	0.00	150.0	± 9.6 %
		Y	5.00	67.26	16.38		150.0	
		Z	4.81	67.49	16.41		150.0	
10140-CAD	LTE-FDD (SC-FDMA, 100% RB, 15 MHz, 16-QAM)	X	3.12	67.54	15.99	0.00	150.0	± 9.6 %
		Y	3.19	67.29	15.77		150.0	
		Z	3.06	67.85	15.96		150.0	
10141-CAD	LTE-FDD (SC-FDMA, 100% RB, 15 MHz, 64-QAM)	X	3.25	67.75	16.21	0.00	150.0	± 9.6 %
		Y	3.32	67.47	15.98		150.0	
		Z	3.20	68.12	16.21		150.0	
10142-CAD	LTE-FDD (SC-FDMA, 100% RB, 3 MHz, QPSK)	X	1.74	69.31	15.23	0.00	150.0	± 9.6 %
		Y	1.76	68.27	15.08		150.0	
		Z	1.70	69.77	15.16		150.0	
10143-CAD	LTE-FDD (SC-FDMA, 100% RB, 3 MHz, 16-QAM)	X	2.16	69.07	14.68	0.00	150.0	± 9.6 %
		Y	2.25	68.80	15.00		150.0	
		Z	2.14	69.68	14.51		150.0	
10144-CAD	LTE-FDD (SC-FDMA, 100% RB, 3 MHz, 64-QAM)	X	1.74	65.28	12.23	0.00	150.0	± 9.6 %
		Y	1.92	65.76	12.95		150.0	
		Z	1.60	65.02	11.63		150.0	
10145-CAE	LTE-FDD (SC-FDMA, 100% RB, 1.4 MHz, QPSK)	X	0.58	60.00	6.08	0.00	150.0	± 9.6 %
		Y	0.77	61.39	8.08		150.0	
		Z	0.51	60.00	5.48		150.0	
10146-CAE	LTE-FDD (SC-FDMA, 100% RB, 1.4 MHz, 16-QAM)	X	0.86	60.00	5.96	0.00	150.0	± 9.6 %
		Y	1.06	60.98	7.22		150.0	
		Z	0.74	60.00	5.02		150.0	
10147-CAE	LTE-FDD (SC-FDMA, 100% RB, 1.4 MHz, 64-QAM)	X	0.87	60.00	6.02	0.00	150.0	± 9.6 %
		Y	1.11	61.42	7.56		150.0	
		Z	0.75	60.00	5.07		150.0	

10149-CAD	LTE-FDD (SC-FDMA, 50% RB, 20 MHz, 16-QAM)	X	2.66	67.71	15.91	0.00	150.0	± 9.6 %
		Y	2.72	67.28	15.65		150.0	
		Z	2.62	68.12	15.90		150.0	
10150-CAD	LTE-FDD (SC-FDMA, 50% RB, 20 MHz, 64-QAM)	X	2.79	67.78	15.99	0.00	150.0	± 9.6 %
		Y	2.84	67.35	15.74		150.0	
		Z	2.75	68.24	16.00		150.0	
10151-CAD	LTE-TDD (SC-FDMA, 50% RB, 20 MHz, QPSK)	X	6.77	80.29	22.54	3.98	65.0	± 9.6 %
		Y	6.33	78.29	21.53		65.0	
		Z	5.47	77.85	21.33		65.0	
10152-CAD	LTE-TDD (SC-FDMA, 50% RB, 20 MHz, 16-QAM)	X	5.33	73.49	19.97	3.98	65.0	± 9.6 %
		Y	5.34	72.96	19.59		65.0	
		Z	4.49	71.58	18.77		65.0	
10153-CAD	LTE-TDD (SC-FDMA, 50% RB, 20 MHz, 64-QAM)	X	5.80	74.93	21.00	3.98	65.0	± 9.6 %
		Y	5.76	74.19	20.51		65.0	
		Z	4.93	73.13	19.88		65.0	
10154-CAE	LTE-FDD (SC-FDMA, 50% RB, 10 MHz, QPSK)	X	2.06	70.10	16.57	0.00	150.0	± 9.6 %
		Y	2.05	68.80	16.03		150.0	
		Z	2.02	70.56	16.62		150.0	
10155-CAE	LTE-FDD (SC-FDMA, 50% RB, 10 MHz, 16-QAM)	X	2.44	69.38	16.19	0.00	150.0	± 9.6 %
		Y	2.45	68.46	15.88		150.0	
		Z	2.48	70.36	16.35		150.0	
10156-CAE	LTE-FDD (SC-FDMA, 50% RB, 5 MHz, QPSK)	X	1.50	68.47	14.19	0.00	150.0	± 9.6 %
		Y	1.57	67.97	14.49		150.0	
		Z	1.45	68.72	13.95		150.0	
10157-CAE	LTE-FDD (SC-FDMA, 50% RB, 5 MHz, 16-QAM)	X	1.49	64.88	11.44	0.00	150.0	± 9.6 %
		Y	1.72	65.90	12.60		150.0	
		Z	1.33	64.34	10.66		150.0	
10158-CAE	LTE-FDD (SC-FDMA, 50% RB, 10 MHz, 64-QAM)	X	2.60	69.64	16.38	0.00	150.0	± 9.6 %
		Y	2.61	68.72	16.07		150.0	
		Z	2.64	70.64	16.53		150.0	
10159-CAE	LTE-FDD (SC-FDMA, 50% RB, 5 MHz, 64-QAM)	X	1.55	65.11	11.61	0.00	150.0	± 9.6 %
		Y	1.80	66.26	12.82		150.0	
		Z	1.39	64.54	10.79		150.0	
10160-CAD	LTE-FDD (SC-FDMA, 50% RB, 15 MHz, QPSK)	X	2.57	69.60	16.63	0.00	150.0	± 9.6 %
		Y	2.56	68.57	16.14		150.0	
		Z	2.47	69.70	16.54		150.0	
10161-CAD	LTE-FDD (SC-FDMA, 50% RB, 15 MHz, 16-QAM)	X	2.67	67.78	15.84	0.00	150.0	± 9.6 %
		Y	2.73	67.32	15.62		150.0	
		Z	2.63	68.26	15.83		150.0	
10162-CAD	LTE-FDD (SC-FDMA, 50% RB, 15 MHz, 64-QAM)	X	2.79	68.04	16.00	0.00	150.0	± 9.6 %
		Y	2.85	67.55	15.77		150.0	
		Z	2.75	68.57	16.01		150.0	
10166-CAE	LTE-FDD (SC-FDMA, 50% RB, 1.4 MHz, QPSK)	X	3.17	69.79	19.57	3.01	150.0	± 9.6 %
		Y	3.20	68.89	18.78		150.0	
		Z	2.95	69.14	18.87		150.0	
10167-CAE	LTE-FDD (SC-FDMA, 50% RB, 1.4 MHz, 16-QAM)	X	3.80	72.70	19.93	3.01	150.0	± 9.6 %
		Y	3.79	71.51	19.09		150.0	
		Z	3.55	72.23	19.31		150.0	