REF. NO.	PART NO.	DESCRIPTION	QTY
C1	30D72003000	CAP. SMD805 2PF NPO	1
C2	030B0422	CAP. LYTIC 4.7UF 25V	1
C3	030B0444	CAP. RF TUNING 1.8-5.0PF	1
C4	NOTE 8	CAP SMD 805	1
C5	NOTE 8	CAP SMD 805	1
C7,9	030D73910000	CAP. SMD805 39PF NPO	2
C6	NOTE 8	CAP. SMD805	1
C8	030D76800000	CAP. SMD805 6.8PF NPO	1
D1	52B0065	DIODE SMD SIGNAL	1
L1	040B0092	COIL 470UH	1
JU1	304A0001-50	JUMPERS .5 SPACING	1
JU2	311C0001	JUMPER SMD805	1
Q1	207C0074	TRANSISTOR SMD NPN RF	1
Q2	207C0073	TRANSISTOR SMD NPN SW	1
R1	311C4325	RES. SMD805 4.3K 1/10W 5%	1
R2	NOTE 8	RES. SMD805	1
R3	311C6225	RES. SMD805 6.2K 1/10W 5%	1
SW1,SW2,SW3	180B0120-2	SWITCH HORZ MOMENTARY	3
U1	125C0130	IC SMD ROLLING CODE ATMEL	1
E1	032B0128	BATTERY TERMINAL NEG	1
ITEM1	014R0480	PCB 16UP ARRAY	0.0625

PART NUMBER:			195D1255	C
ECN/DATE	BY	APP	REVISION	REV
K-283 1/31/97	LK	AM	RELEASE	A
L-5359 10/24/97	LK	RA	C2 WAS 030B0469 AND SW1,2,3 WERE 180B0120	B
M-128A 16JUL98	MF		ADDED NOTE 8	C

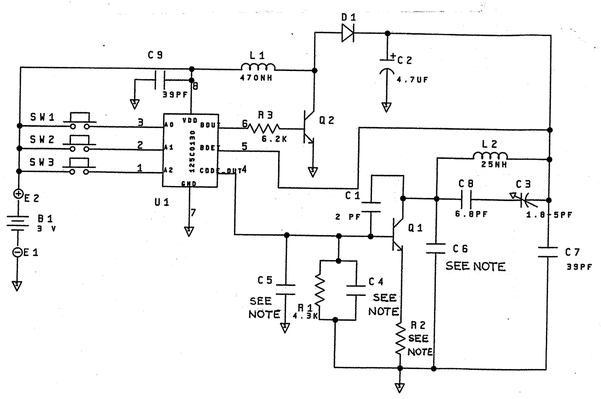

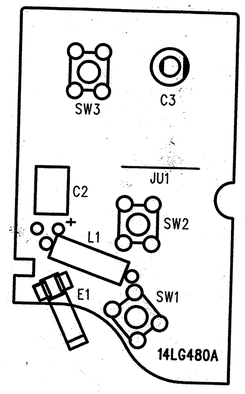

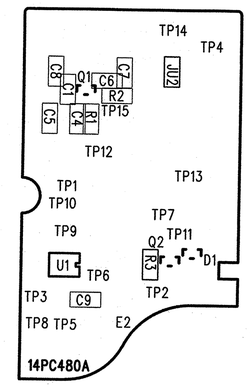

NOTES:
1. UNLESS OTHERWISE NOTED:
   -CAPACITORS ARE IN PICOFARADS
   -RESISTORS ARE IN OHMS
2. ALL LEADED COMPONENTS TO BE INSERTED TO WITHIN .020" OF BODY OR PREFORM LIMITS, EXCEPT SW1,SW2, & SW3 WHICH ARE TO BE WITHIN .010" (SEE DETAIL B).
3. TEST SPEC. REFERENCES: 190A0454, 190A0523.
4. ALL FLUX USED IN SOLDER PROCESS MUST BE HALIDE-FREE.
5. LEAD CLIPPING SPEC. (WIRE LEADED PARTS ONLY) .050 MIN., .095 MAX.
6. CLEANING OF ASSEMBLY WITH A CLEANING SOLVENT AFTER SOLDERING IS NOT PERMITTED.
7. ALL ARRAY TABS MUST BE CUT FLUSH TO EDGE OF PCB, BUT NO MORE THAN .005" INTO BOARD.
8. COMPONENT USAGE CHART:

	1A5076 (390 MHz)		1A5235-1 (433 MHz)	
COMPONENT	PART NO.	DESCRIPTION	PART NO.	DESCRIPTION
C4	030D73910000	CAP SMD 39pF	030D72210000	CAP SMD 22pF
C5	030D73910000	CAP SMD 39pF	030D71210000	CAP SMD 12pF
C6	030D73000020	CAP SMD 3.0pF N220	030D71003040	CAP SMD 1.0pF N470
R2	311C9115	RES SMD 910 OHM	311C8215	RES SMD 820 OHM

DETAIL 'A'

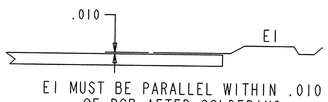

E1 MUST BE PARALLEL WITHIN .010 OF PCB AFTER SOLDERING

DETAIL 'B'

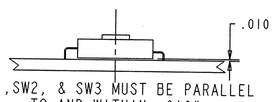

SW1,SW2, & SW3 MUST BE PARALLEL TO AND WITHIN .010" OF BOARD SURFACE AFTER SOLDERING.

THIRD ANGLE PROJECTION

CONFIDENTIAL
THIS DRAWING AND/OR INFORMATION CONTAINED HEREIN IS AND REMAINS THE PROPERTY OF THE CHAMBERLAIN GROUP, INC. (CHAMBERLAIN). IT IS LOANED TO RECIPIENT BY THE CHAMBERLAIN GROUP, INC. AND MAY NOT BE REPRODUCED, COPIED, MODIFIED, DISCLOSED, REDISTRIBUTED, OR MADE AVAILABLE TO OTHERS, EXCEPT WITH THE EXPRESS WRITTEN CONSENT OF CHAMBERLAIN. THIS DRAWING AND ALL COPIES, IF ANY, ARE SUBJECT TO RETURN TO CHAMBERLAIN.

THIS IS A COMPUTER GENERATED DRAWING
DO NOT CHANGE THIS DOCUMENT WITHOUT
UPDATING THE COMPUTER DATA BASE

TOLERANCES EXCEPT AS NOTED:
±.010 .00 DECIMAL
±.005 .000 DECIMAL
±1/64 ON FRACTIONS
±30' ON ANGLES
±.003 ON HOLES

THIS COPY ISSUED:

DO NOT SCALE DRAWING

FINISH			
DRAWN	LAK	1/31/97	
CHECKED	AM	2/17/97	
APPROVED	JF	2/18/97	

CHAMBERLAIN CONSUMER PRODUCTS GROUP
A UNIT OF DUCHOSSOIS INDUSTRIES, INC

NAME: ASS'Y, 3 CHNL STD TX CHANGE PLUS ROLLING

MATERIAL

SCALE	PART NUMBER	REV
NONE	195D1255	C