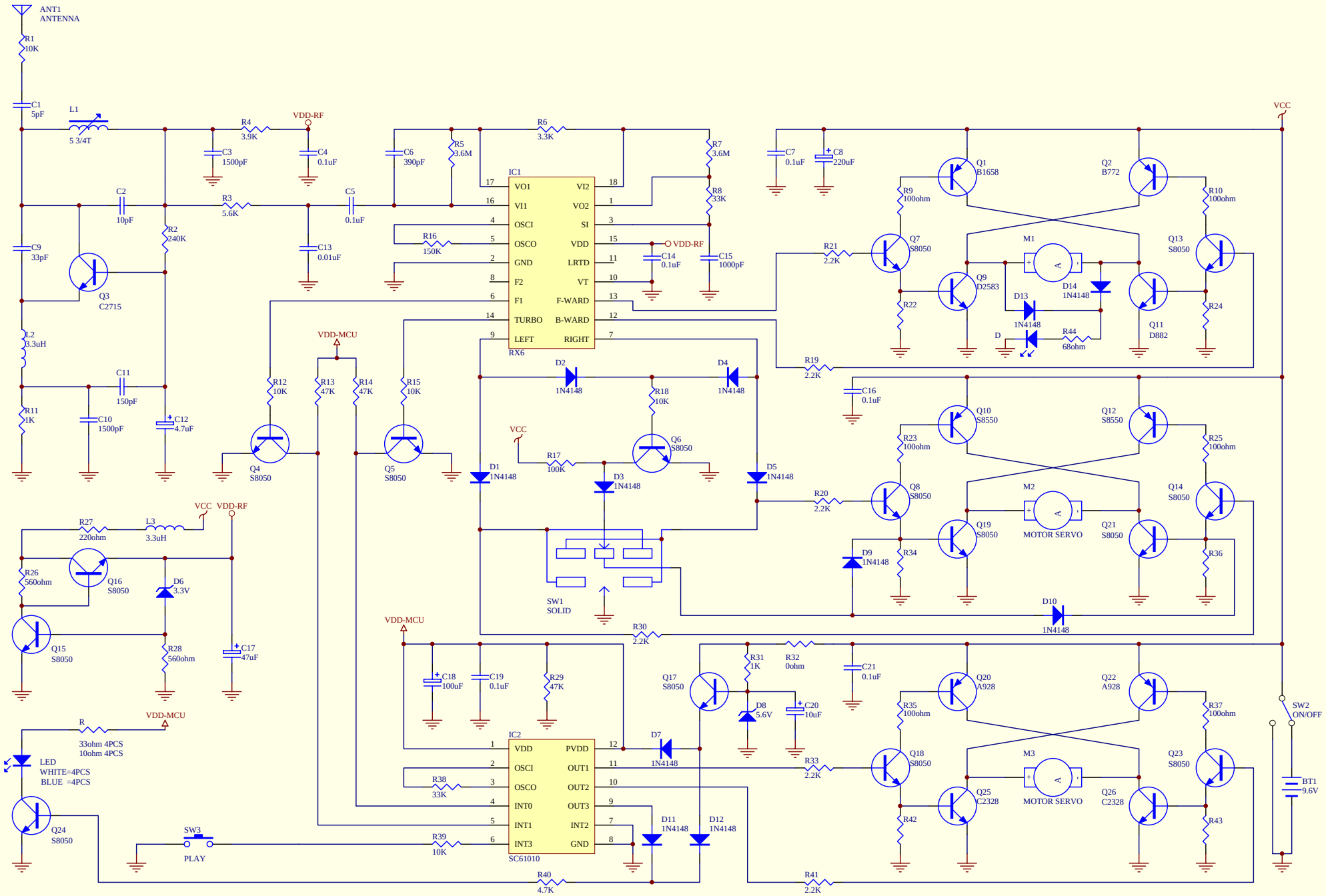


| | | |
|---|---|---|
| Title | 91276-RX | |
| Size A3 | Number | Revision 1.0 |
| Date: 24-Sep-2003 | | Sheet of |
| File: E:\CLIENT99\Street Car.ddb | | Drawn By: *Honghua wang* |