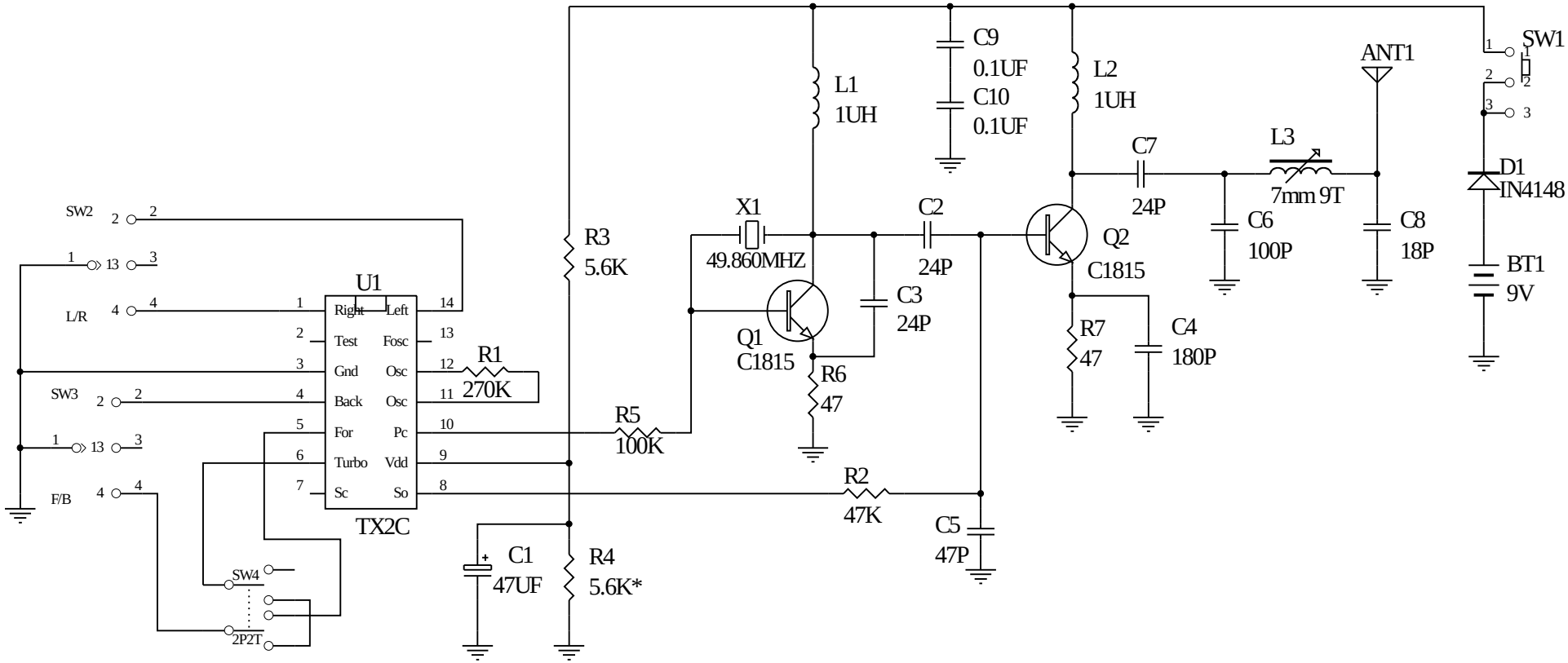

Title		
91255T-49		
Size A4	Number	Revision
Date: 23-Jun-2003		Sheet of
File: E:\launch\91255\91255.ddb		Drawn By: