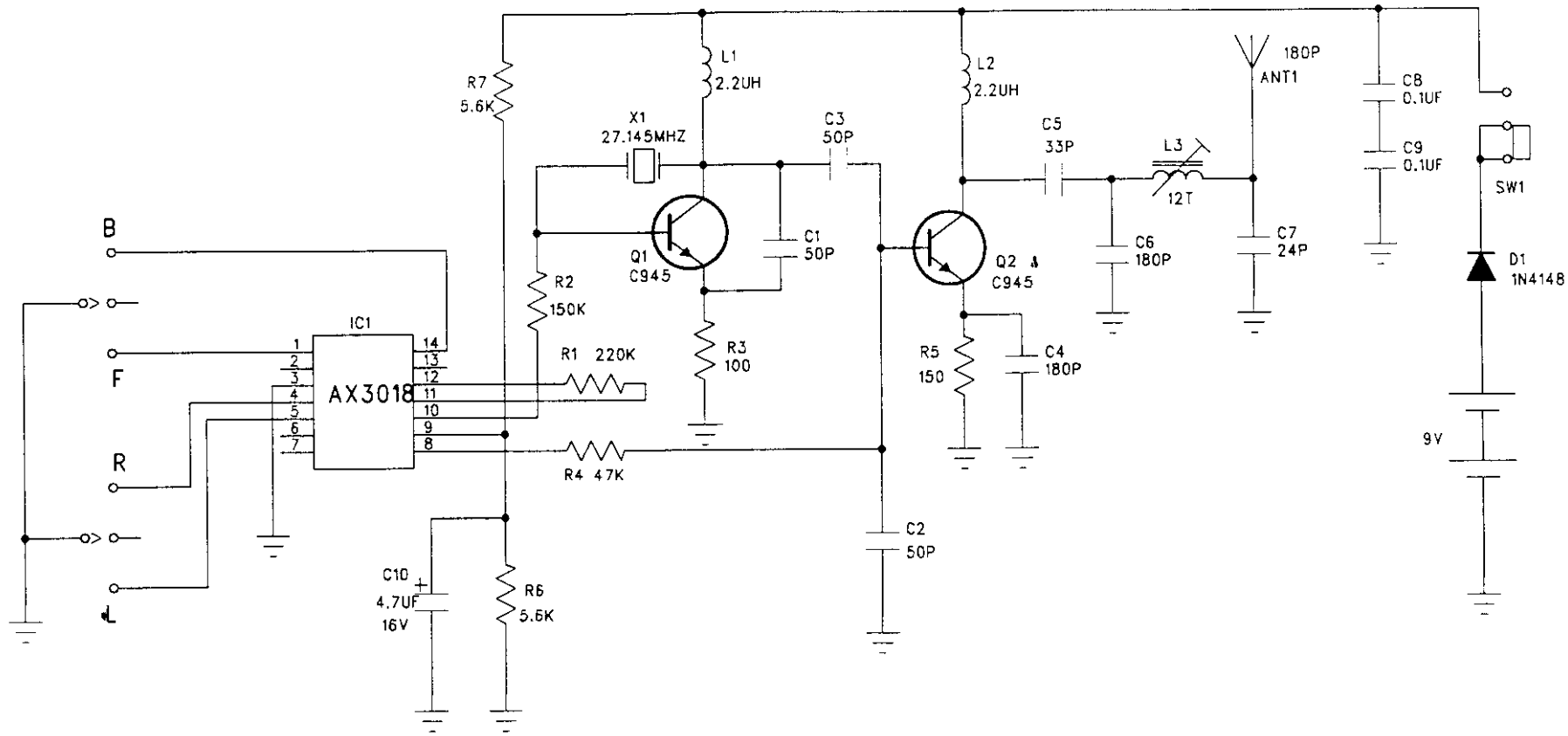

NOTE:ALL RESISTANCE VALUES ARE IN "ohm"
ALL CAPACITANCE VALUES ARE IN "UF"

* MYLAR

ECHO TOYS LTD	
MODEL	91130T-27
DWG NO	
DATE	17 MARCH 98
DESIGNER	