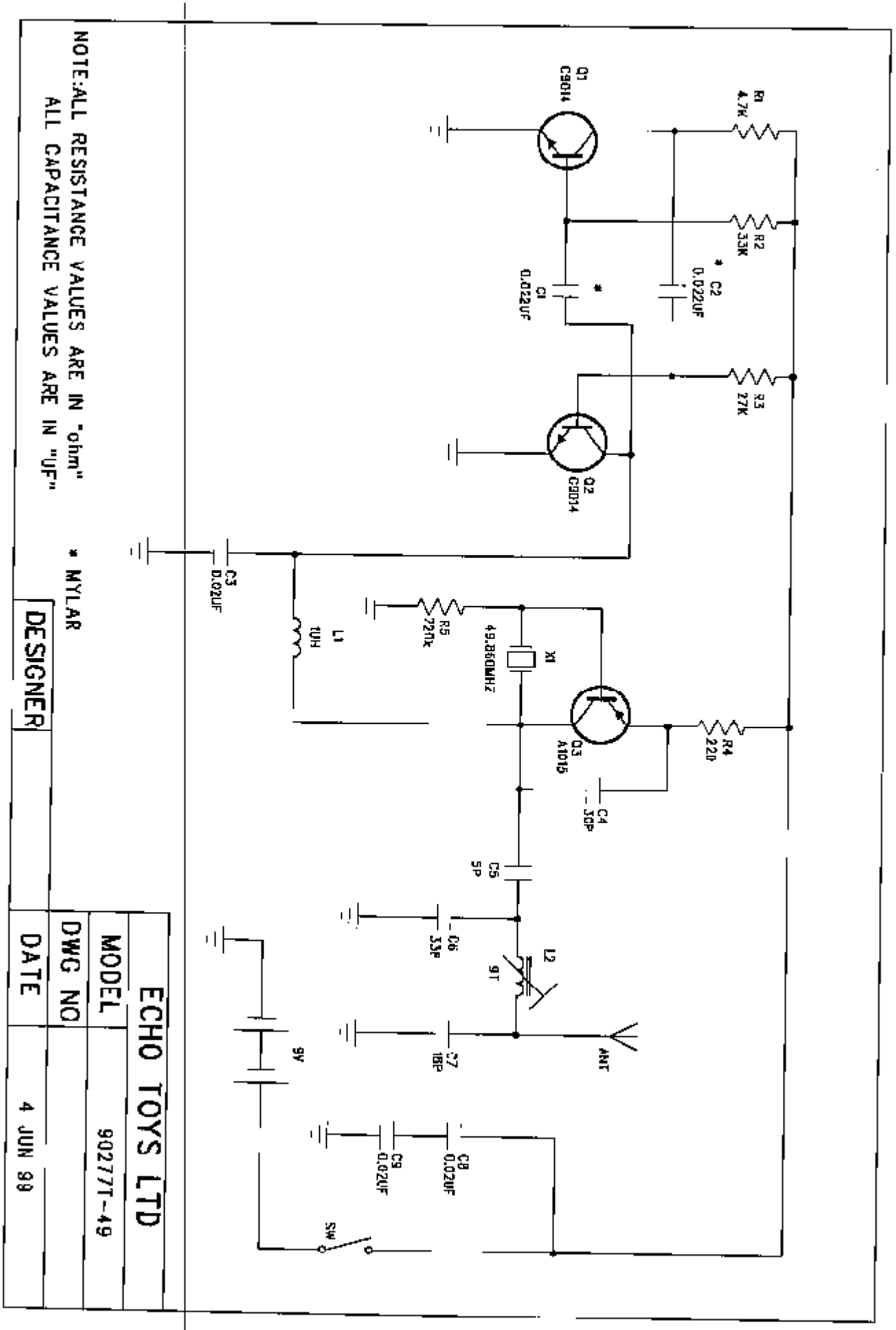
R1
4.7K
R2
33K
R3
27K
R4
22D
R5
22Dk
Q1
C9014
Q2
C9014
Q3
A1015
* C2
0.022UF
C1
0.022UF
C3
0.02UF
L1
1UH
X1
49.860MHZ
C4
30P
C5
5P
C6
33P
L2
9T
C7
18P
ANT
9V
C8
0.02UF
C9
0.02UF
SW
NOTE:ALL RESISTANCE VALUES ARE IN "ohm"
ALL CAPACITANCE VALUES ARE IN "UF"
* MYLAR
DESIGNER
ECHO TOYS LTD
MODEL
90277T-49
DWG NO
DATE
4 JUN 99