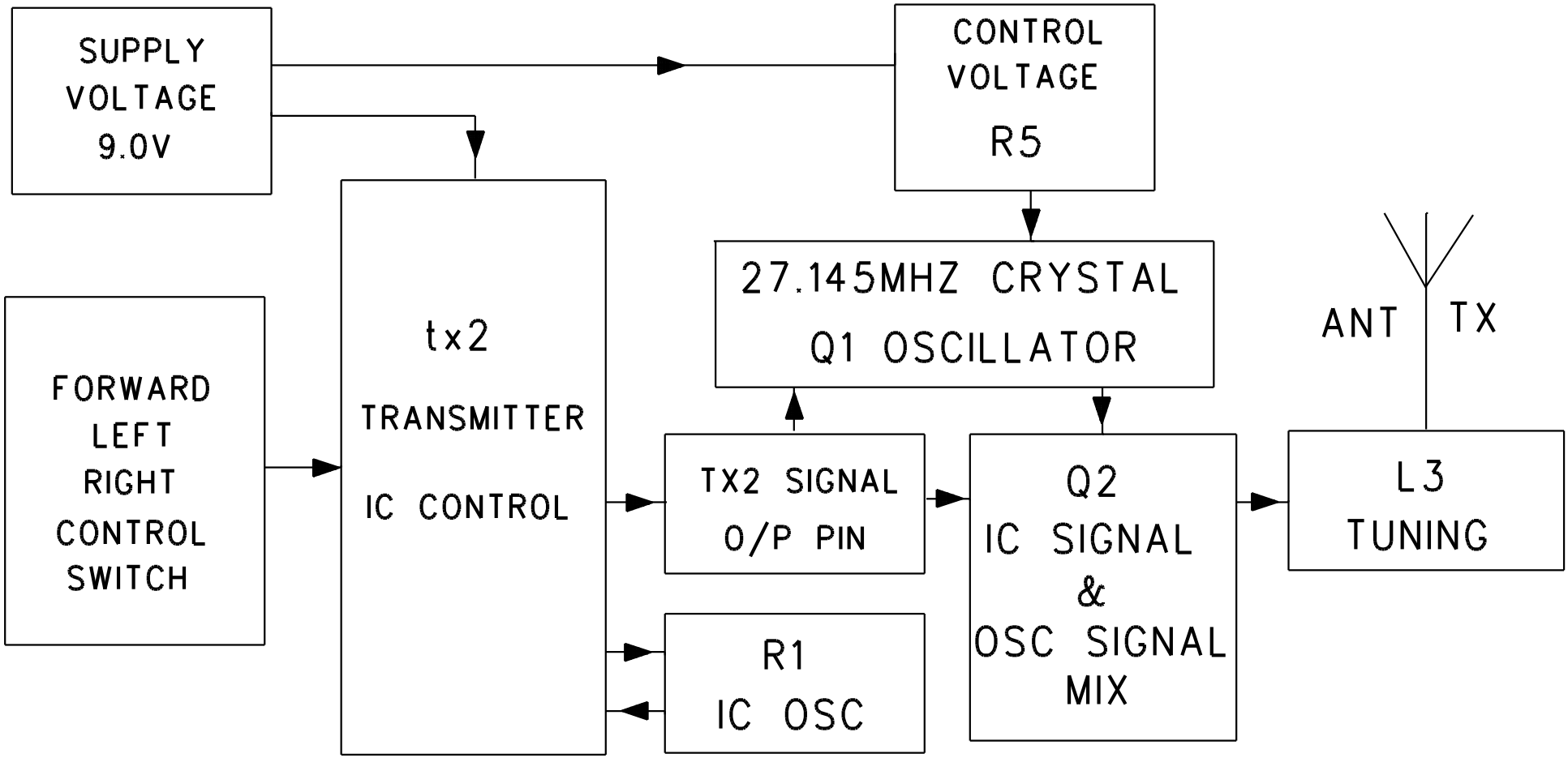

ECHO TOYS LTD	
	BLOCK DIAGRAM
MODEL	91229T27
DATE	02 APR 2003

DESIGNER