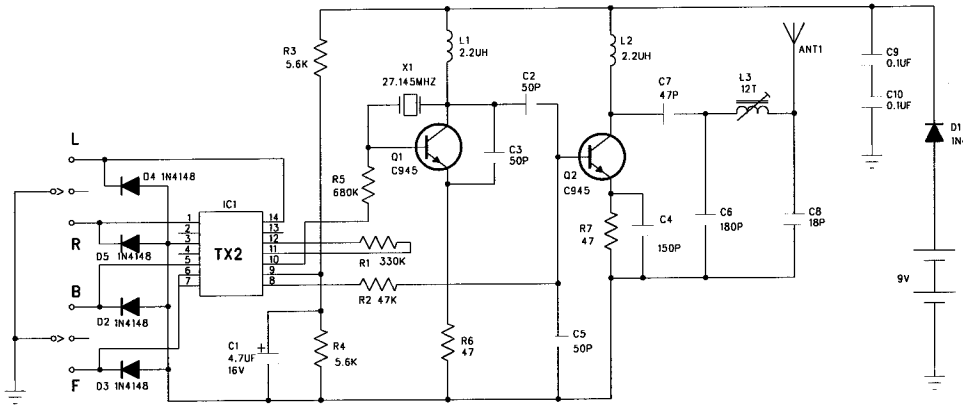

ECHO TOYS LTD	
MODEL	26T-27
DWG NO	
DATE	21 AUGUST 2000

NOTE:ALL RESISTANCE VALUES ARE IN "ohm"
ALL CAPACITANCE VALUES ARE IN "UF"

* MYLAR

DESIGNER