REVISIONS							
REV.	ZONE	No.	DESCRIPTION	E.C.	BY	APVD.	DATE
A			INITIAL REL PER EDR #31837		DEK		
B	D	4	ROTATED PINS 10 DEGREES. 1.55 WAS 1.50. ADDED .570. .501 AND .085. ALSO. .250 WAS .270.	E1921	JG		
C	A-4 C-4		REVISED NOTE 1, ITEM 3 REMOVED DIM. .03 MAX.	E2155	DEK		
D	B-1		REVISED DASH NUMBER REV'S	E2386	DEK		
E	B-1		ADDED FREQUENCY ID TO TABLE AND NOTE 2.	E2625	DEK		
F			MOVED PINS TO OPPOSITE SIDE	E4898	DEK		

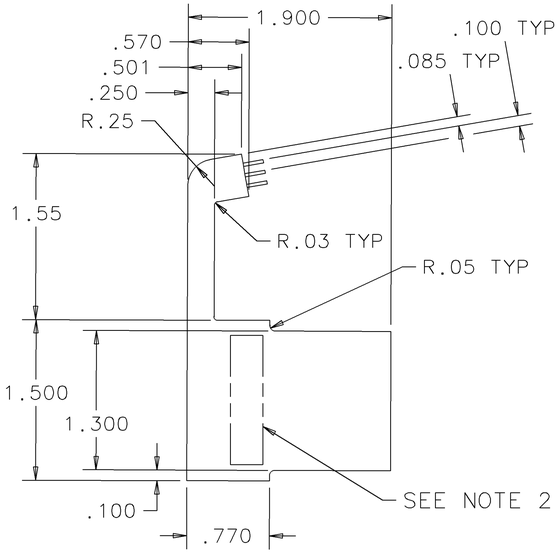

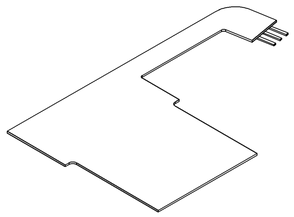

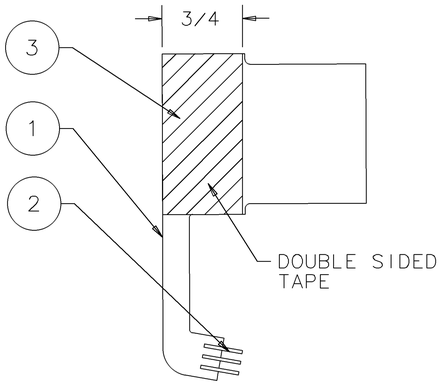

DASH NO.	FREQUENCY (MHz)	FREQUENCY ID	REV
-01	434	E	D
-02	916	U	D
-03	418	I	D

NOTES:

1. MATERIAL:
   ITEM 1: FLEX
   ITEM 2: CONTACT, SOLDER TAB, FFC AMP #487884-1 (OR EQUIV.), 3 REQ'D.
   ITEM 3: DOUBLE - COATED FOAM TAPE. 3M NO. 4032.
2. PART NUMBER, REVISION LEVEL AND FREQUENCY ID (SEE TABLE) SHALL BE PERMANENTLY MARKED AS SHOWN.

ITEM	QTY.	PART NO.	DESCRIPTION	REMARKS/REF. SYMBOL

NEXT ASSY	USED ON

THE DWG. & SPECIFICATION CONTAINED HEREON ARE PROPRIETARY AND MUST NOT BE USED, COPIED, REPRODUCED NOR ITS CONTENTS COMMUNICATED TO OTHERS EXCEPT IN ACCORDANCE WITH WRITTEN INSTRUCTIONS RECEIVED FROM SYMBOL TECHNOLOGIES INC.

DO NOT SCALE DRAWING

DIMENSIONS ARE IN INCHES
UNLESS OTHERWISE SPECIFIED

	MM	INCH
.XX	+/-	+/- .01
.XXX	+/-	+/- .005

ANGLES ± 1° FRACTIONS ± 1/64

MATERIAL: SEE NOTE 1

FINISH:

APPROVALS		DATE
DRAWN	J.GIORDANO	7/11/96
CHECKED	J.TU	7/11/96
ENGINEER	JG	7/11/96
MFG. ENG.		
PRODUCT		
QUALITY		

SYMBOL TECHNOLOGIES INC.
Bohemia, New York

MECHANICAL OUTLINE DWG
ANTENNA; FLEX
SOLAR ECLIPSE CORDLESS

SIZE C | DWG. NO. 10-19160-XX | REV. F

SCALE: 1:1 | SOLID MODEL YES X NO | SHEET 1 OF 1

REVISIONS							
REV.	ZONE	ECO	DESCRIPTION	E.C.	BY	APVD.	DATE
A			INITIAL REL PER EDR #31837		DEK		
B	D	4	ROTATED PINS 10 DEGREES, 1.55 WAS 1.50, ADDED .570, .501 AND .085. ALSO, .250 WAS .270.	E1921	JG		
C	A-4 C-4		REVISED NOTE 1, ITEM 3 REMOVED DIM, .03 MAX.	E2155	DEK		
D	B-1		REVISED DASH NUMBER REV'S	E2386	DEK		
E	B-1		ADDED FREQUENCY ID TO TABLE AND NOTE 2.	E2625	DEK		
F			MOVED PINS TO OPPOSITE SIDE	E4898	DEK		

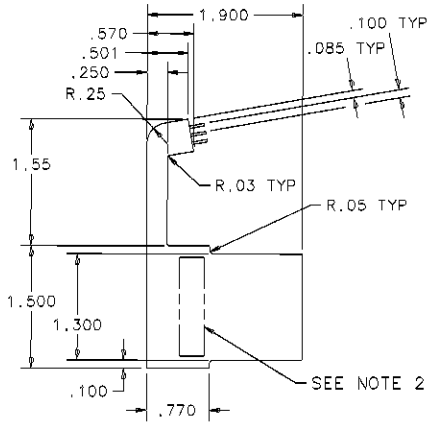

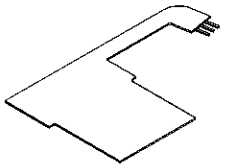

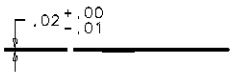

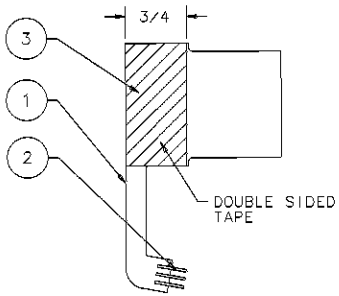

DASH NO.	FREQUENCY (MHz)	FREQUENCY ID	REV
-01	434	E	D
-02	916	U	D
-03	418	I	D

NOTES:

1. MATERIAL:
   ITEM 1: FLEX
   ITEM 2: CONTACT, SOLDER TAB, FFC AMP #487884-1 (OR EQUIV.), 3 REQ'D.
   ITEM 3: DOUBLE - COATED FOAM TAPE. 3M NO. 4032.
2. PART NUMBER, REVISION LEVEL AND FREQUENCY ID (SEE TABLE) SHALL BE PERMANENTLY MARKED AS SHOWN.

ITEM	QTY.	PART NO.	DESCRIPTION	REMARKS/REF. SYMBOL

NEXT ASSY	USED ON

THE DWG. & SPECIFICATION CONTAINED HEREON ARE PROPRIETARY AND MUST NOT BE USED, COPIED, REPRODUCED NOR ITS CONTENTS COMMUNICATED TO OTHERS EXCEPT IN ACCORDANCE WITH WRITTEN INSTRUCTIONS RECEIVED FROM SYMBOL TECHNOLOGIES INC.

DO NOT SCALE DRAWING

DIMENSIONS ARE IN INCHES
UNLESS OTHERWISE SPECIFIED

	MM	INCH
.XX	+/-	+/- .01
.XXX	+/-	+/- .005

ANGLES ± 1° FRACTIONS ± 1/64

MATERIAL: SEE NOTE 1

FINISH:

APPROVALS		DATE
DRAWN	J.GIORDANO	7/11/98
CHECKED	J.TU	7/11/98
ENGINEER	JG	7/11/98
MFG. ENG.		
PRODUCT		
QUALITY		

SYMBOL TECHNOLOGIES INC.
Bohemia, New York

MECHANICAL OUTLINE DWG
ANTENNA; FLEX
SOLAR ECLIPSE CORDLESS

SIZE C | DWG. NO. 10-19160-XX | REV. F

SCALE: 1:1 | SOLID MODEL YES X NO | SHEET 1 OF 1