TECOM PROPRIETARY:
INFORMATION CONTAINED HEREIN SHALL NOT BE DISCLOSED TO A THIRD PARTY WITHOUT WRITTEN PERMISSION FROM TECOM.

REVISIONS

ZONE	LTR	DESCRIPTION	DATE	APPROVED
	1	RELEASED AS A SYMBOL DOCUMENT PER PPD#65366	3/28/01	J.C.

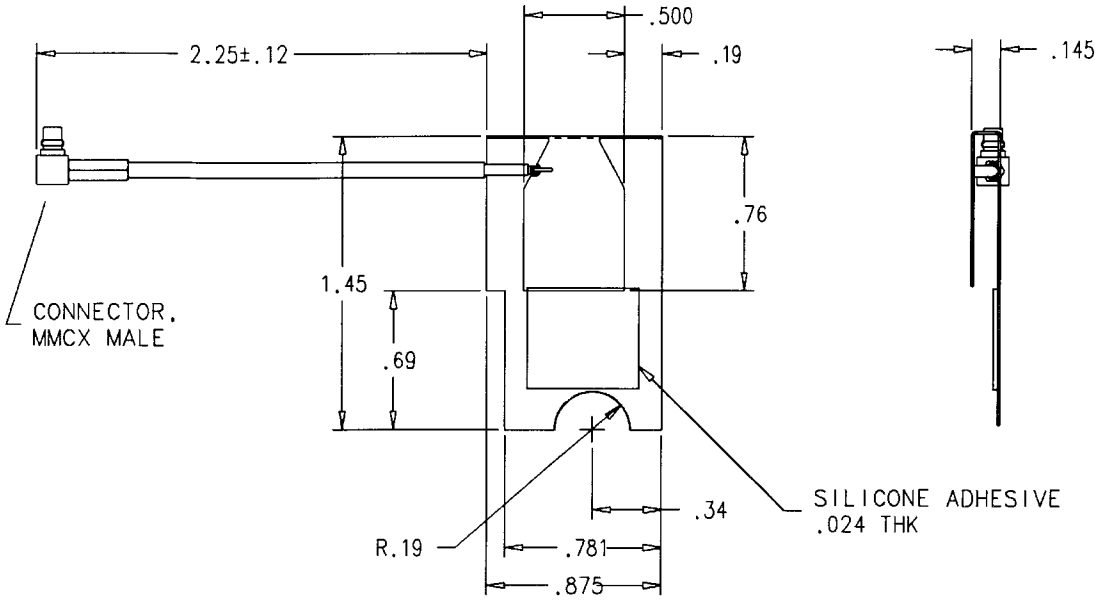

6. TOLERANCES ON: .XX ±.03, .XXX ±.010, ANGLES ±0°30'0'0'0'0'

5. INTERNAL & EXTERNAL CORNERS TO BE R.03 MAX.

4. SHARP CORNERS & EDGES .005 MAX.

3. FINISH SHALL BE UNIFORM AND EXHIBIT NO EVIDENCE OF CORROSION OR OXIDATION WHEN VIEWED WITH THE UNAIDED EYE. EDGE PLATING ON CUT OR SHEARED SURFACES IS NOT REQUIRED.

2. ALTERNATE:
MATERIAL: CRS 1008, .010 THK.
FINISH: BRIGHT TIN PLATE PER MIL-T-10727A, TYPE 1, ELECTRO DEPOSITED .00010-.00025 IN.

1. MATERIAL: ELECTROLYTIC TIN PLATED STEEL SHEET, .010 THK.

NOTES : UNLESS OTHERWISE SPECIFIED

SCALE

SPECIFICATIONS

FREQUENCY:	2.4-2.485 GHZ
VSWR	2.5:1 MAX
GAIN	0dBi NOMINAL
POLARIZATION	LINEAR

PMIC	
NEXT ASSY	USED ON
APPLICATION	

UNLESS OTHERWISE SPECIFIED:
DIMENSIONS ARE IN INCHES.
TOLERANCES: .XX ± .0303
.XXX ± .01010ANGLES ± 0°30'0'0'
MACHINED SURFACE ROUGHNESS 125√
REMOVE BURRS, SHARP EDGES R.005-.015
MACHINED FILLETS R.005-.015
DIMENSIONS ARE AFTER PLATING.
MACHINED DIA'S ON COMMON CENTERLINE CONCENTRIC WITHIN .005 TIR.
INTERPRET PER ANSI Y14.5M-1982.

HOLE TOLERANCES:

.040 - .128	+.003 −.001	.515 - .750	+.008 −.001
.136 - .228	+.004 −.001	.765 - 1.000	+.010 −.002
.234 - .500	+.006 −.001	1.031 UP	+.015 −.002

MATL ENGR	APPROVAL

CONTRACT NUMBER	
CONTRACTOR	
DRAWN BY J. LOWE	DATE 6-29-00
CHECKER	MFG ENGR
QA	ENGR
PRGM MGR	ENGR

TECOM INDUSTRIES INC.
9324 TOPANGA CYN BLVD CHATSWORTH, CA. 91311
TECHNICAL EXCELLENCE COMMITTED TO QUALITY

TITLE
ANTENNA, 2.4 GHZ

SIZE	CAGE CODE	DWG NO
C	52791	703676

SCALE 2/1 | UNIT WT | SHEET 1 OF 1