ENGINEERING HISTORY

REV	STATUS	Engineer	DATE
1.0	Initial	AMOS.LIU	
2.0	re-schematic	JUSTIN.HUANG	04/02/04

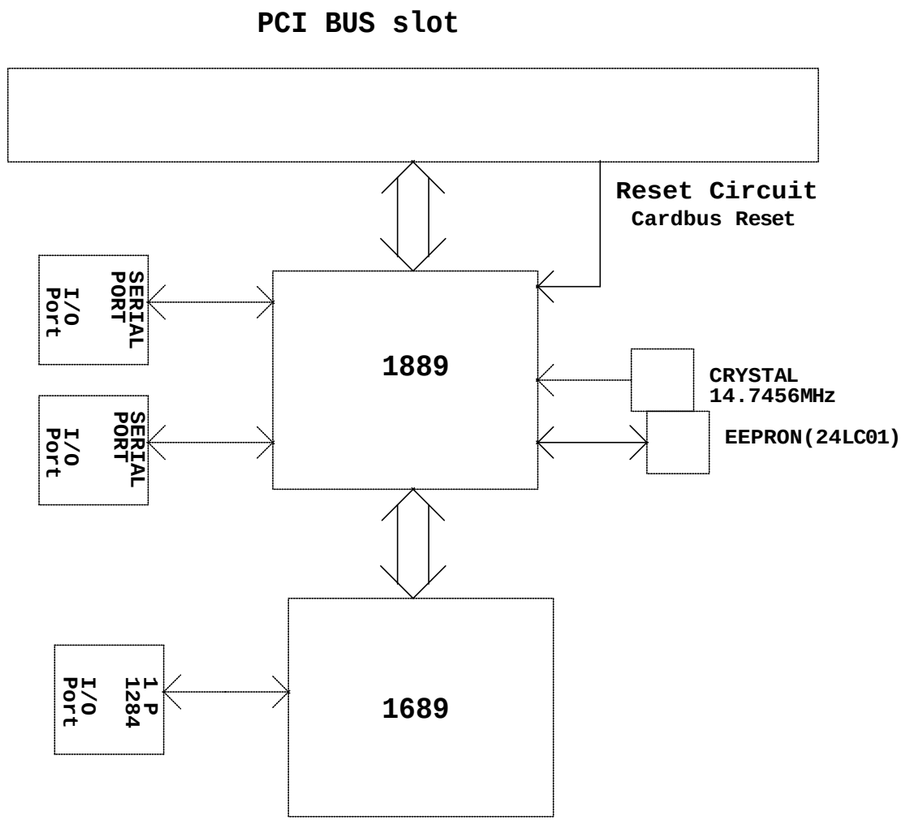

Title	4079FL	
Size B	Document Number BlockDiagram	Rev 2.0
Date: Friday, March 05, 2004	Sheet 1 of 5	