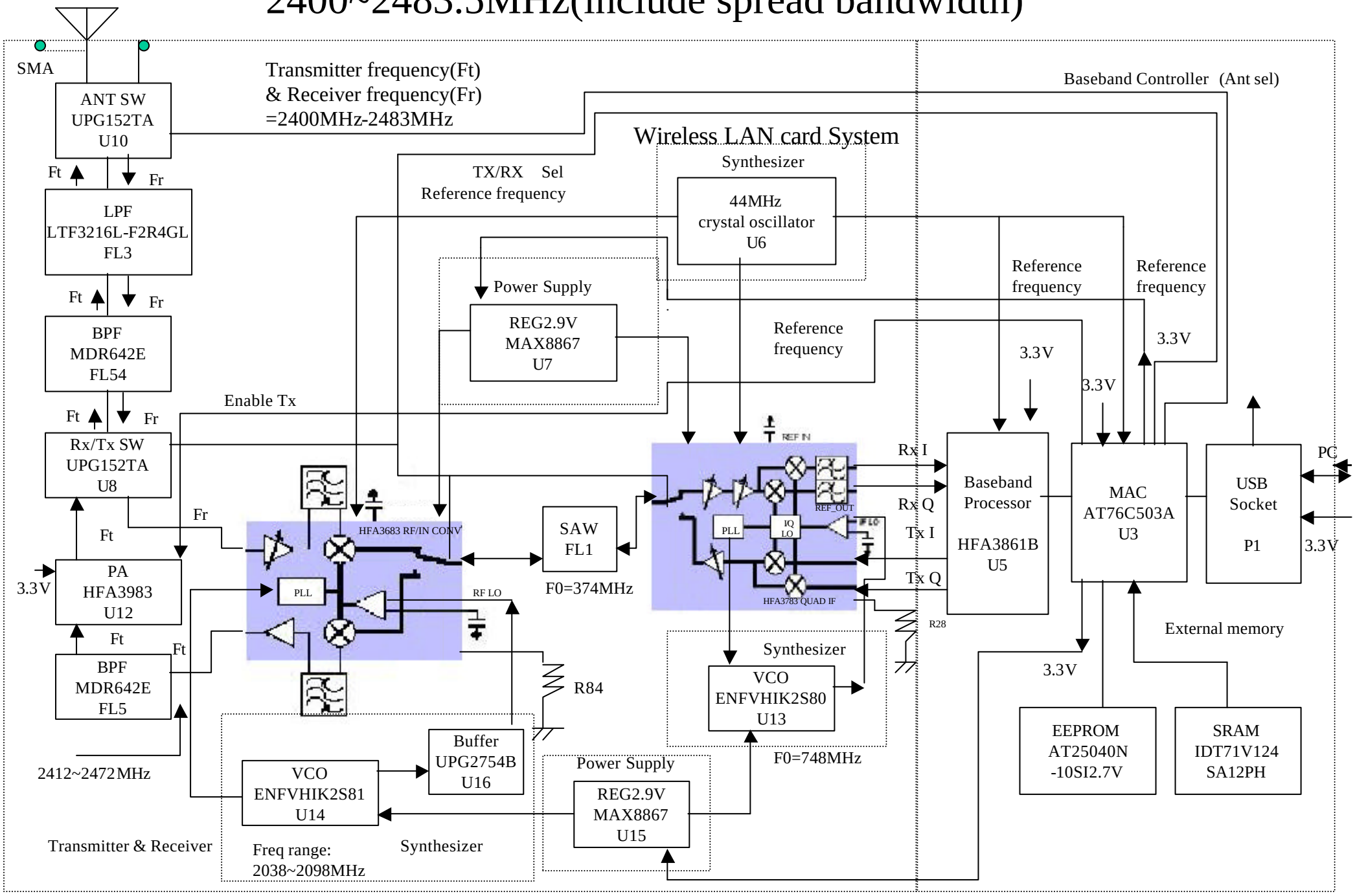2400~2483.5MHz(include spread bandwidth)