Antenna Composite Gain Test Report

1. Test Information

Brand name	Askey Computer Corp
Model name	AP5692W
Connector type	I-PEX connector
Antenna type	Dipole antenna
Test date	2023/5/23
Test condition	Free space
Equipment	G-Fiber mesh Tri-Band mesh Wi-Fi 6E system

2. Test Frequency

The middle frequency of each bands are selected to represent each frequency bands.

Band (MHz)	Test Frequency(MHz)
2400~2500	2450
5150~5250	5200
5250~5350	5300
5470~5725	5600
5725~5850	5785
5925~6425	6175
6425~6525	6475
6525~6875	6695
6875~7125	6995

3. Antenna System

Antenna No	Brand name	Part number	Ant. type	connector	operating
Ant 1	Masterwave	98P00VIPF001	Dipole	I-PEX	2.4+6GHz
Ant 2	Masterwave	98P00VIPF002	Dipole	I-PEX	2.4+6GHz
Ant 3	Masterwave	98P00UIPF000	Dipole	I-PEX	5GHz
Ant 4	Masterwave	98P00UIPF001	Dipole	I-PEX	5GHz
Ant 5	Masterwave	98P00VIPF003	Dipole	I-PEX	6GHz
Ant 6	Masterwave	98P00VIPF004	Dipole	I-PEX	6GHz
Ant 7	Masterwave	98PX9MIPF001	Dipole	I-PEX	2.4GHz

4. Test Configuration

Reference to CTIA "CTIA-test-plan-for wireless-device-over-the air-performance-ver-3-7-1.

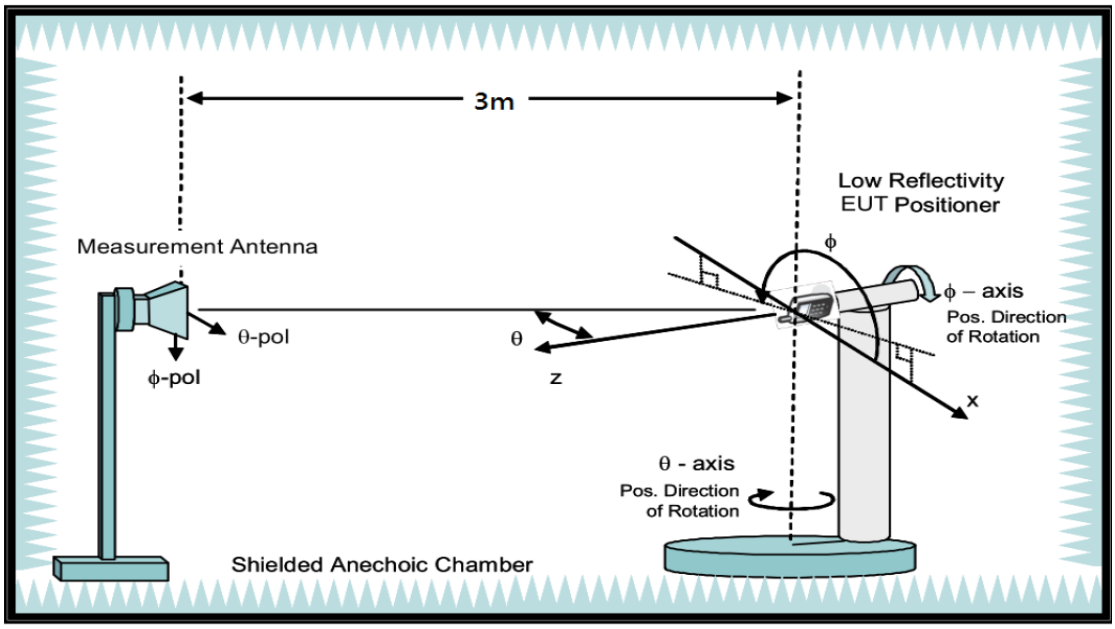

5. Test Method

EUT set on multi-axis positioner. Measurement antenna set at phi polarization and 1.5 meter height. Port 1 of network analyzer connect to antenna 1 of EUT. Record S21 value every 15 degree from 0 to 345 degree on phi angle and 0 to 180 on theta angle of multi-axis positioner. Then set measurement antenna to theta polarization and repeat process to each antenna of EUT.

6. System Schematic (ETS. Lindgren typical AMS-8000)

Instrument	Calibration date
Network Analyzer R3767CG	2022/11/10
Slot Switch (SW) Agilent 3499B	2022/7/25
Turn table controller EMCO 2090	2023/3/20

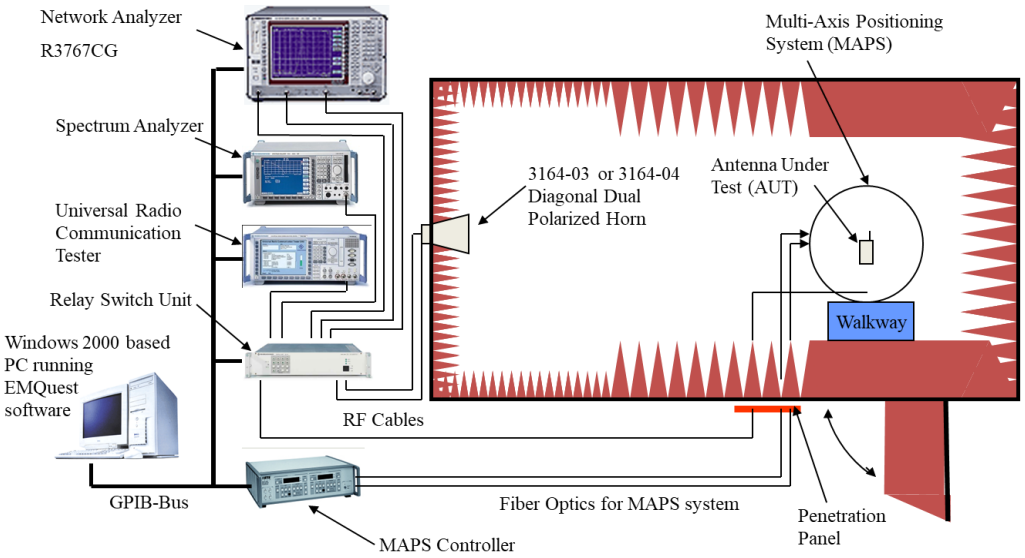

7. Test Setup

Test Position

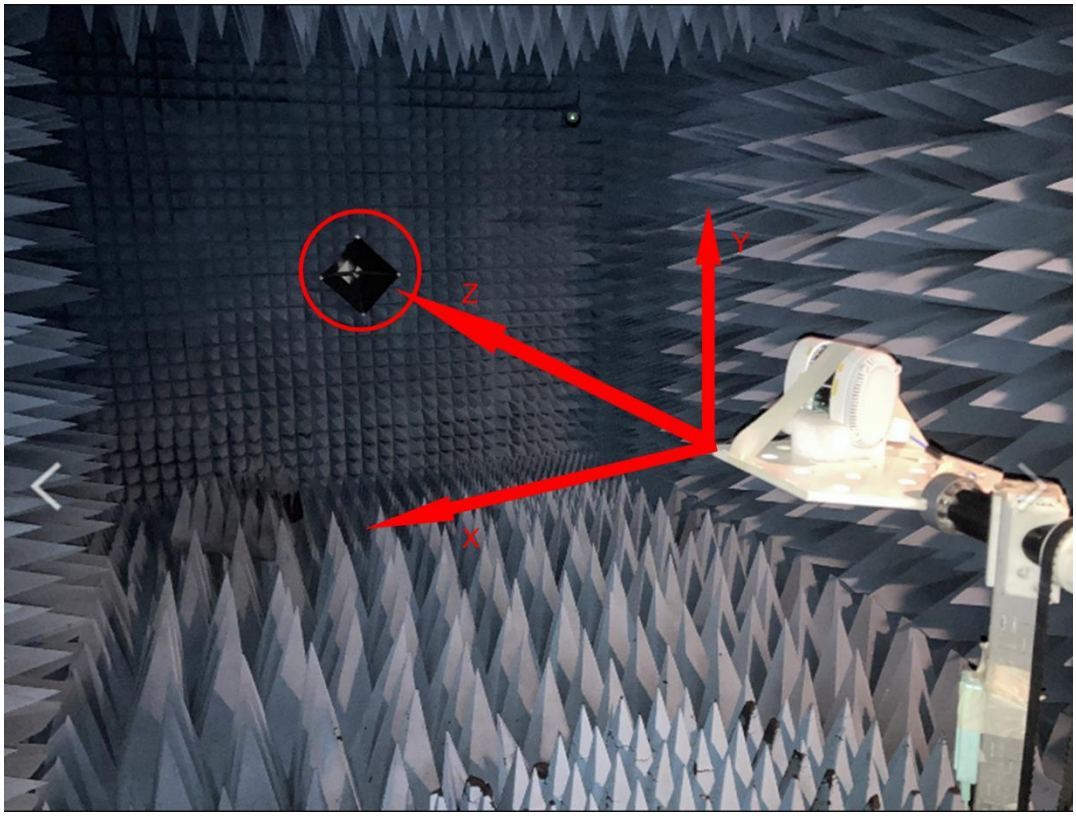

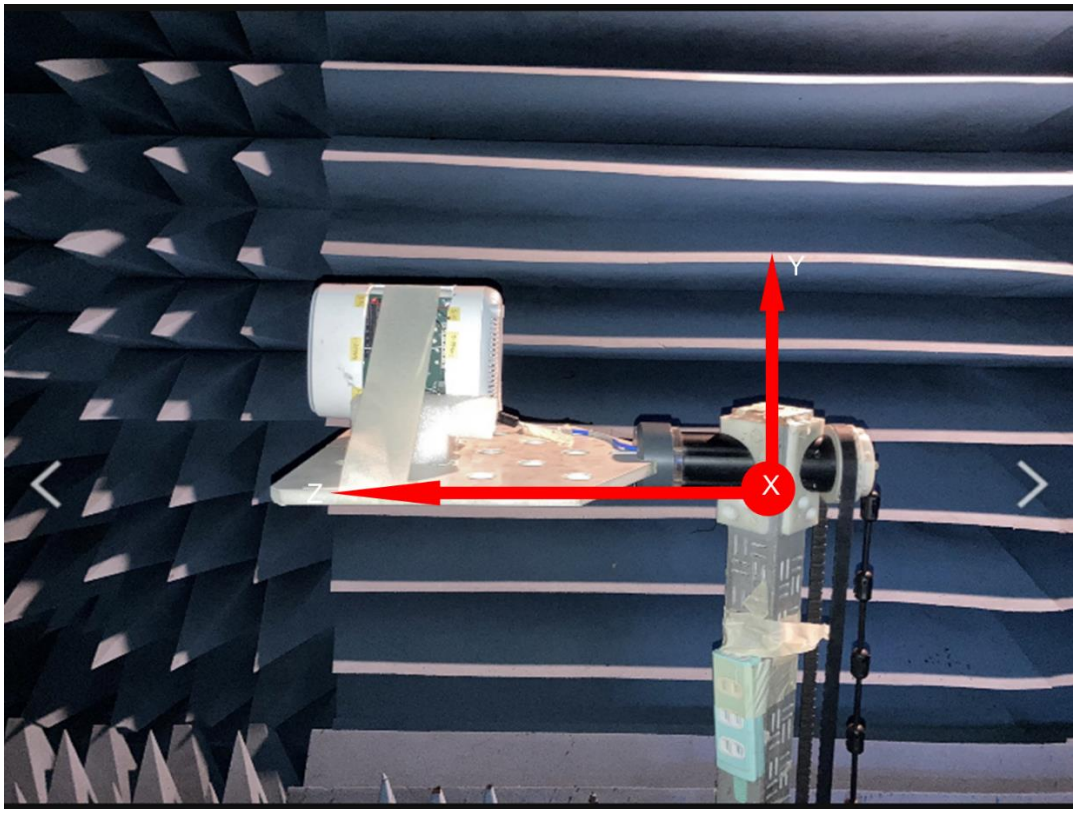

8. Test Result

Wi-Fi 2.4GHz band Antenna Directional Gain		
Frequency. (MHz)	2 ANT combine uncorrelated	2 ANT combine correlated
2450	1.09	3.65
Wi-Fi 5GHz band Antenna Directional Gain		
Frequency. (MHz)	2 ANT combine uncorrelated	2 ANT combine correlated
5200	2.17	4.93
5300	2.51	4.44
5600	3.03	5.07
5800	2.00	4.51
Wi-Fi 6GHz band Antenna Directional Gain		
Frequency. (MHz)	4 ANT combine uncorrelated	4 ANT combine correlated
6175	0.23	5.91
6475	-1.36	4.64
6695	-0.23	5.45
6995	0.49	5.85

Wi-Fi Antenna passive performance

	Frequency (MHz)	2450	5200	5300	5600	5800	6175	6475	6695	6995
Ant 1	Peak Gain (dBi)	1.54					3.04	0.14	2.26	2.83
	Efficiency(%)	52.78					72.75	50.27	53.21	59.30
Ant 2	Peak Gain (dBi)	0.08					3.02	2.24	2.39	3.33
	Efficiency(%)	52.23					56.65	50.73	58.10	54.56
Ant 3	Peak Gain (dBi)		0.43	0.57	-0.01	0.81				
	Efficiency(%)		54.40	64.69	50.49	52.35				
Ant 4	Peak Gain (dBi)		2.97	2.32	2.90	3.01				
	Efficiency(%)		56.85	54.09	50.08	56.04				
Ant 5	Peak Gain (dBi)						3.36	0.84	1.33	3.01
	Efficiency(%)						69.73	49.56	50.16	60.55
Ant 6	Peak Gain (dBi)						3.53	1.38	1.52	2.12
	Efficiency(%)						56.62	50.61	54.50	57.53
BT	Peak Gain (dBi)	1.81								
	Efficiency(%)	54.04								

Appendix A

✓ 2 ANT combine uncorrelated for 2450MHz

Phi\Theta	0	15	30	45	60	75	90	105	120	135	150	165	180
0	-7.48535	-7.6053	-5.45744	-3.14033	-1.47263	-0.89091	0.117108	0.511325	-0.34591	-1.42302	-1.13775	-6.33578	-7.19385
15	-7.48535	-7.38805	-5.19494	-2.79534	-0.27382	0.032723	0.315752	0.581813	-0.73626	-1.84262	-1.7136	-5.50191	-7.19385
30	-7.48535	-6.99996	-4.89649	-2.46336	-0.6578	0.760237	-0.57696	-0.26851	-2.15017	-2.73708	-3.20908	-4.05264	-7.19385
45	-7.48535	-6.33508	-4.3519	-2.55393	-0.39706	0.471535	-0.75681	-2.22874	-4.38935	-4.33775	-5.20426	-3.12963	-7.19385
60	-7.48535	-5.64848	-3.48216	-2.2016	-0.04062	0.168295	-1.93359	-2.65722	-4.55029	-6.28747	-7.1129	-2.53131	-7.19385
75	-7.48535	-5.17416	-2.91641	-1.49834	-0.00465	-0.69305	-3.53491	-2.91495	-5.26187	-6.623	-7.8172	-2.38348	-7.19385
90	-7.48535	-4.99288	-2.80224	-1.08667	-0.04213	-1.3923	-3.67284	-4.64994	-5.55654	-5.91354	-7.30696	-2.39462	-7.19385
105	-7.48535	-4.54262	-2.55051	-0.85016	-0.50967	-1.59917	-2.69222	-5.55868	-4.86894	-5.45138	-6.32103	-2.29275	-7.19385
120	-7.48535	-4.34583	-2.51016	-0.82451	-0.82435	-1.35194	-2.18326	-3.80074	-4.72174	-5.16999	-4.67058	-2.12138	-7.19385
135	-7.48535	-4.86535	-2.99337	-1.31895	-0.59723	-1.34022	-2.49687	-3.33024	-4.41823	-4.19482	-2.94041	-2.28594	-7.19385
150	-7.48535	-5.50319	-3.56932	-1.55219	-0.29376	-1.25352	-2.00474	-3.89418	-3.19092	-2.77692	-1.89707	-2.95316	-7.19385
165	-7.48535	-6.01083	-3.91297	-1.24304	-0.05516	-0.559	-1.14009	-2.42716	-2.73548	-2.21236	-1.93827	-3.8719	-7.19385
180	-7.48535	-6.46462	-4.20894	-1.19061	-0.76047	-0.57214	-1.75979	-2.18858	-2.06689	-1.99292	-2.47807	-4.53336	-7.19385
195	-7.48535	-6.74627	-4.4449	-1.93845	-3.08425	-1.8082	-2.67304	-2.50513	-1.22616	-1.16278	-3.03952	-5.11015	-7.19385
210	-7.48535	-6.55711	-4.34033	-3.47919	-6.27745	-3.52644	-3.43064	-1.75422	-0.85151	-0.84886	-4.02111	-5.50016	-7.19385
225	-7.48535	-6.10949	-4.09711	-4.61367	-6.95172	-5.6631	-5.35631	-1.79417	-1.86458	-2.42844	-5.68741	-5.92848	-7.19385
240	-7.48535	-5.61358	-3.79141	-4.4723	-6.20273	-8.12306	-9.26476	-4.3224	-4.38341	-5.3384	-6.86546	-6.39172	-7.19385
255	-7.48535	-5.27591	-3.35968	-4.23213	-5.40447	-10.7324	-12.2951	-10.3441	-7.59106	-7.44106	-6.83382	-6.83587	-7.19385
270	-7.48535	-5.10629	-3.08774	-3.82128	-4.78873	-10.0846	-10.8645	-13.2196	-7.40968	-7.26223	-5.7054	-6.6951	-7.19385
285	-7.48535	-5.30165	-3.28774	-3.36033	-4.15872	-7.12982	-7.94592	-9.39	-4.59723	-6.01775	-4.6352	-6.21667	-7.19385
300	-7.48535	-6.03873	-4.19337	-2.94527	-3.39747	-5.37641	-4.38144	-5.82805	-1.92152	-4.14815	-3.99621	-6.18747	-7.19385
315	-7.48535	-6.83581	-5.17435	-3.1043	-2.99804	-4.29619	-1.93631	-2.28473	0.122738	-2.15926	-3.34237	-6.33138	-7.19385
330	-7.48535	-7.42866	-5.87033	-3.99527	-3.51945	-2.55488	-0.88312	-0.03089	1.090988	-0.76477	-2.50793	-6.63665	-7.19385
345	-7.48535	-7.58121	-5.8749	-4.44892	-3.36858	-1.86309	-0.50027	0.460649	0.663009	-0.19554	-1.59754	-7.18263	-7.19385
360	-7.48535	-7.6053	-5.45744	-3.14033	-1.47263	-0.89091	0.117108	0.511325	-0.34591	-1.42302	-1.13775	-6.33578	-7.19385
Max Combination Ga		1.090988											

✓ 2 ANT combine correlated for 2450MHz

Phi\Theta	0	15	30	45	60	75	90	105	120	135	150	165	180
0	-4.52212	-4.96965	-2.96571	-0.35616	1.457246	1.706549	2.256233	2.629443	1.983355	1.12177	1.612225	-3.39945	-4.71458
15	-4.52212	-5.0224	-2.8264	0.031669	2.586086	2.626297	2.56244	2.55152	1.252876	0.688716	1.23889	-2.55518	-4.71458
30	-4.52212	-4.92538	-2.36786	0.393914	2.245257	3.446028	1.965139	1.666911	0.005446	-0.27593	-0.21172	-1.07837	-4.71458
45	-4.52212	-4.14802	-1.56461	0.352117	2.604278	3.34093	1.811912	-0.31114	-1.93802	-1.58777	-2.20182	-0.14692	-4.71458
60	-4.52212	-3.22116	-0.54023	0.787054	2.967489	3.036839	-0.04267	-1.3792	-1.82717	-3.28343	-4.10365	0.47215	-4.71458
75	-4.52212	-2.55492	0.064695	1.511129	3.005474	1.943851	-1.80865	-1.7108	-2.25313	-3.9056	-4.98451	0.626061	-4.71458
90	-4.52212	-2.18137	0.196694	1.921963	2.951766	1.459645	-0.95087	-2.46887	-2.98124	-3.44959	-4.76486	0.60301	-4.71458
105	-4.52212	-1.6591	0.452553	2.157719	2.431033	1.408214	0.289286	-2.56899	-2.61631	-3.17949	-3.76158	0.691501	-4.71458
120	-4.52212	-1.4559	0.497719	2.185543	1.999795	1.485416	0.138686	-1.29663	-2.4395	-3.20327	-1.96591	0.842362	-4.71458
135	-4.52212	-1.95129	0.013615	1.685831	2.064412	1.263687	-0.66923	-1.39779	-2.40065	-2.58959	-0.19153	0.596759	-4.71458
150	-4.52212	-2.56813	-0.60659	1.321425	2.22265	1.161001	-0.54228	-1.95131	-1.74802	-1.17722	0.658397	-0.28421	-4.71458
165	-4.52212	-3.05231	-1.00251	1.353129	2.539712	1.598116	0.336831	-0.85492	-1.53362	-0.48036	0.124301	-1.5193	-4.71458
180	-4.52212	-3.46699	-1.28578	1.518707	1.958077	1.665635	-0.06772	-0.49368	-0.64339	-0.35715	-0.75896	-2.50829	-4.71458
195	-4.52212	-3.73784	-1.47199	0.960051	-0.45363	0.434027	-1.27006	-0.87493	0.34882	0.729615	-0.79877	-3.26933	-4.71458
210	-4.52212	-3.58558	-1.36472	-0.59006	-4.14432	-1.47588	-1.86795	-0.94662	1.351987	1.477481	-1.18655	-3.48558	-4.71458
225	-4.52212	-3.17379	-1.12558	-1.84209	-4.0272	-3.55099	-3.22169	-0.50413	0.818819	0.242932	-2.6784	-3.50116	-4.71458
240	-4.52212	-2.68569	-0.81279	-1.62035	-3.36259	-5.37528	-6.69472	-2.44773	-1.44333	-2.39586	-3.99268	-3.63518	-4.71458
255	-4.52212	-2.38837	-0.35703	-1.23823	-2.82786	-7.73589	-9.54402	-7.5296	-4.58273	-4.43273	-3.97391	-3.88226	-4.71458
270	-4.52212	-2.27643	-0.07857	-0.82532	-2.00768	-7.08699	-8.26318	-10.2369	-4.40204	-4.25332	-2.73719	-3.69224	-4.71458
285	-4.52212	-2.49311	-0.27857	-0.38472	-1.28678	-4.11961	-5.0046	-6.3797	-1.63554	-3.01856	-1.63479	-3.20804	-4.71458
300	-4.52212	-3.2292	-1.18638	0.047702	-0.66868	-2.3953	-2.16601	-3.11296	0.85849	-1.33175	-1.02017	-3.18343	-4.71458
315	-4.52212	-3.99659	-2.16438	-0.09935	-0.47754	-1.49262	0.198312	0.03576	2.734337	0.315842	-0.46624	-3.36269	-4.71458
330	-4.52212	-4.4712	-2.89472	-1.0023	-1.00713	-0.24466	1.397636	2.230634	3.651772	1.524848	0.21176	-3.68759	-4.71458
345	-4.52212	-4.58279	-3.14497	-1.57447	-0.51842	0.262532	1.750874	2.911985	3.169859	2.181677	1.036852	-4.25275	-4.71458
360	-4.52212	-4.96965	-2.96571	-0.35616	1.457246	1.706549	2.256233	2.629443	1.983355	1.12177	1.612225	-3.39945	-4.71458
Max Combination Ga		3.651772											

Appendix B

✓ 2 ANT combine uncorrelated for 5200MHz

Phi\Theta	0	15	30	45	60	75	90	105	120	135	150	165	180
0	-2.74416	-3.37207	-6.32273	-2.04477	-0.83884	0.750299	1.426985	1.369954	2.172919	0.810736	0.137616	0.088034	-1.09908
15	-2.74416	-2.02347	-3.8384	-4.17284	-0.5555	-0.24033	-0.96099	0.42252	0.638744	-0.46993	-1.19502	-0.87063	-1.09908
30	-2.74416	-3.49795	-4.82297	-1.27646	-0.60059	-3.3317	-2.51269	1.171311	1.919075	-0.69926	-0.86522	-2.04323	-1.09908
45	-2.74416	-6.65705	-2.68965	-3.07568	-2.15418	-3.70797	-4.75621	-1.30806	-0.13515	0.296799	-1.43224	-2.24181	-1.09908
60	-2.74416	-6.19117	-0.52673	-3.30705	-2.39786	-3.85444	-2.34901	-1.09802	-0.42518	-1.74145	-1.68696	-2.3492	-1.09908
75	-2.74416	-3.50133	-2.30884	-1.06133	-2.75264	-2.08827	-4.29258	-2.27353	-1.82919	-0.91463	-2.67657	-2.53263	-1.09908
90	-2.74416	-2.30284	-4.94954	1.511355	-1.70705	-1.29004	-4.48949	-2.82033	-2.04412	-1.74331	-3.18901	-2.66186	-1.09908
105	-2.74416	-2.21724	-4.51023	1.937246	-1.74535	-2.10785	-3.94454	-3.71089	-3.49634	-4.60045	-1.91931	-2.64185	-1.09908
120	-2.74416	-3.01306	-1.87246	1.299006	0.448892	-5.15889	-4.55213	-2.33908	-6.63012	-4.87895	-0.9554	-2.04238	-1.09908
135	-2.74416	-3.63209	-1.31197	0.405567	-1.20976	-1.98885	-3.07193	-6.13519	-6.49325	-3.95699	-0.64154	-1.8225	-1.09908
150	-2.74416	-3.59708	-1.91171	-0.35552	-1.11594	-3.43963	-6.00139	-4.82664	-3.16533	-3.96907	-0.77497	-1.14507	-1.09908
165	-2.74416	-4.09707	-2.0508	-2.08587	-3.01393	-3.06899	-3.92248	-5.7225	-4.99698	-2.5684	-1.18492	-0.84627	-1.09908
180	-2.74416	-4.78919	-2.04038	-1.09974	-1.2987	-4.562	-5.51346	-2.28553	-2.53633	-2.85511	-1.18301	-2.16435	-1.09908
195	-2.74416	-5.78731	-4.71403	-5.75429	-5.13888	-2.04714	-3.69643	-5.06968	-3.97352	-3.63805	-1.14016	-5.34929	-1.09908
210	-2.74416	-5.56958	-4.2254	-2.26403	-4.08352	-7.59058	-3.5225	-2.85539	-3.42534	-5.25243	-4.37835	-6.29177	-1.09908
225	-2.74416	-4.13775	-4.28888	-5.52589	-4.23151	-5.3472	-5.88847	-5.44133	-6.91237	-5.07927	-5.77495	-4.77175	-1.09908
240	-2.74416	-3.24781	-6.89944	-4.80712	-5.69491	-5.15305	-6.01323	-4.81197	-4.53437	-5.88099	-5.95316	-5.67591	-1.09908
255	-2.74416	-2.80089	-7.27288	-2.23845	-5.0949	-4.9819	-4.84447	-7.76728	-3.45005	-8.16073	-5.83805	-6.0831	-1.09908
270	-2.74416	-2.64458	-6.79428	-2.11643	-3.912	-4.67091	-1.80022	-6.53968	-5.26583	-6.89205	-4.75421	-6.92982	-1.09908
285	-2.74416	-2.69047	-6.41568	-2.75633	-4.69038	-6.06787	-1.96033	-5.82443	-7.38263	-5.81331	-6.18731	-6.23566	-1.09908
300	-2.74416	-2.32994	-7.18299	-4.83673	-4.06908	-9.34068	-6.28689	-4.3232	-4.18835	-4.42746	-8.2399	-6.28254	-1.09908
315	-2.74416	-2.62919	-9.71033	-7.2906	-4.97334	-5.34074	-8.78679	-2.16916	-2.30699	-6.91545	-3.9554	-6.64681	-1.09908
330	-2.74416	-4.11734	-6.75873	-2.58457	-3.91051	-2.01334	-4.64999	-3.96444	-2.37331	-1.09138	-3.30926	-4.08248	-1.09908
345	-2.74416	-5.24854	-3.32527	-4.03894	0.688136	-0.61916	-1.5019	1.035011	0.633863	-2.77722	-1.95599	-0.84894	-1.09908
360	-2.74416	-3.37207	-6.32273	-2.04477	-0.83884	0.750299	1.426985	1.369954	2.172919	0.810736	0.137616	0.088034	-1.09908
Max Combination Ga		2.172919											

✓ 2 ANT combine correlated for 5200MHz

Phi\Theta	0	15	30	45	60	75	90	105	120	135	150	165	180
0	-0.12492	-0.4351	-3.48259	0.965417	1.816673	3.728072	3.97177	4.360323	4.927276	3.697477	2.164184	2.215156	1.792431
15	-0.12492	0.819419	-0.89586	-1.45087	1.783993	2.338908	1.783472	3.229075	3.541049	2.458618	1.704245	0.929271	1.792431
30	-0.12492	-0.6505	-1.91251	1.679908	2.380107	-0.46316	-0.15139	3.545643	4.54592	2.120062	2.005024	0.466358	1.792431
45	-0.12492	-3.66568	0.31548	-0.07753	0.524432	-1.36119	-1.78017	1.527437	2.815639	3.306199	0.827804	0.672967	1.792431
60	-0.12492	-3.27426	2.211058	-0.31568	0.298602	-0.87928	0.211772	1.295035	1.987919	1.224802	1.220564	0.530235	1.792431
75	-0.12492	-0.82633	0.150911	1.61367	0.221632	-0.0257	-1.41151	0.723556	1.059942	2.028514	0.000842	0.115473	1.792431
90	-0.12492	0.085908	-2.68653	4.518479	1.284318	0.301397	-1.55379	0.001894	0.694787	1.077947	-0.62823	-0.24592	1.792431
105	-0.12492	-0.12465	-2.02818	4.921501	1.217882	-0.75654	-1.21011	-1.44937	-0.73763	-1.69366	0.909598	-0.54174	1.792431
120	-0.12492	-1.54535	1.018265	4.043472	3.264324	-2.24554	-1.55823	0.552431	-3.63474	-2.20275	2.012805	-0.01582	1.792431
135	-0.12492	-1.72043	1.308548	2.736296	1.543509	1.020876	-0.90582	-3.31781	-3.49381	-1.27478	2.344598	0.330115	1.792431
150	-0.12492	-0.81917	-0.17829	2.407507	1.766759	-0.45692	-3.01035	-2.2266	-0.24149	-0.95923	2.235313	1.405063	1.792431
165	-0.12492	-1.15273	0.587354	-0.33952	-0.10788	-0.11877	-2.14726	-2.84389	-2.01311	0.374139	1.822838	2.162165	1.792431
180	-0.12492	-1.90006	0.803429	1.343148	1.329402	-1.60783	-3.51984	0.430718	0.26017	-0.34689	1.803857	0.659795	1.792431
195	-0.12492	-3.43036	-2.57641	-3.59118	-2.39775	0.686169	-1.2269	-2.06703	-1.55046	-0.92296	1.867719	-2.46496	1.792431
210	-0.12492	-3.92542	-1.52777	-0.12641	-1.669	-4.79918	-1.18009	-0.08064	-0.59833	-2.50025	-1.38634	-4.43478	1.792431
225	-0.12492	-1.83047	-1.54775	-3.24808	-1.49148	-2.70157	-3.01907	-2.76633	-4.03624	-2.10915	-3.76786	-2.12861	1.792431
240	-0.12492	-0.66074	-3.88942	-2.43134	-3.99149	-2.59492	-3.50364	-1.94088	-1.54434	-3.53713	-3.28421	-2.67265	1.792431
255	-0.12492	-0.23481	-4.46137	-0.20588	-2.30145	-2.19461	-2.26786	-5.1737	-0.45968	-5.5453	-3.18747	-3.10364	1.792431
270	-0.12492	0.038819	-3.80927	0.353105	-1.32753	-2.83155	0.059705	-3.53703	-2.3759	-4.09758	-2.63009	-3.91961	1.792431
285	-0.12492	0.028077	-3.41753	0.04017	-1.84657	-3.40135	0.823845	-2.81691	-4.73453	-2.84366	-3.83036	-3.23003	1.792431
300	-0.12492	0.48255	-4.22339	-2.09894	-1.17757	-6.34003	-3.35247	-1.3138	-1.36229	-1.47553	-5.22965	-3.36006	1.792431
315	-0.12492	0.259942	-6.73472	-4.49207	-1.97884	-2.83663	-6.35805	0.600294	0.031037	-3.94969	-0.9474	-4.07809	1.792431
330	-0.12492	-1.14818	-3.97768	0.222981	-0.90745	0.981157	-1.63969	-0.98928	0.447947	1.877313	-0.42252	-2.30726	1.792431
345	-0.12492	-2.27382	-0.3323	-1.11578	3.104085	2.233683	0.993963	4.040309	3.555652	0.150003	0.192134	1.40369	1.792431
360	-0.12492	-0.4351	-3.48259	0.965417	1.816673	3.728072	3.97177	4.360323	4.927276	3.697477	2.164184	2.215156	1.792431
Max Combination Ga		4.927276											

✓ 2 ANT combine uncorrelated for 5300MHz

Phi\Theta	0	15	30	45	60	75	90	105	120	135	150	165	180
0	-2.09401	-1.97483	-4.0025	-2.57756	-1.42375	-6.3512	-4.66393	-4.9683	-4.37314	-2.45341	-3.00474	-3.771	-7.21444
15	-2.09401	-2.41891	-4.26694	-5.51726	-1.61894	-3.33547	-7.28997	-4.97074	-2.31189	-3.06531	-3.08858	-3.92125	-7.21444
30	-2.09401	-3.82761	-3.54403	-7.45805	-4.62966	-1.06166	-3.01177	-5.1019	-4.04194	-2.99616	-2.28963	-3.69773	-7.21444
45	-2.09401	-5.92045	-4.61018	-6.85089	-4.94816	-0.89599	0.557686	-2.83137	-1.80916	-2.83483	-3.37897	-3.19152	-7.21444
60	-2.09401	-7.2365	-4.60696	-5.74473	-1.88256	-0.52699	-0.24871	-0.91715	-0.28726	-0.25384	-2.92568	-3.47285	-7.21444
75	-2.09401	-6.7423	-2.33347	-5.1281	-1.56082	0.877587	-1.22891	-3.20939	-1.22507	-0.4056	-2.42148	-3.92927	-7.21444
90	-2.09401	-6.25805	-1.56172	-1.7952	-0.59805	0.442925	0.34742	-3.57775	-3.12783	-0.39123	-2.92908	-3.70161	-7.21444
105	-2.09401	-5.77621	-0.79241	-0.15154	-0.39736	-0.92568	0.391964	-3.04058	-3.16541	0.173684	-1.60223	-3.6399	-7.21444
120	-2.09401	-4.45995	-1.57497	0.688187	1.269955	-0.89841	-0.01258	-4.60005	-3.04497	-1.94045	-0.3881	-4.3934	-7.21444
135	-2.09401	-3.13138	-3.49507	0.809063	0.931329	0.346732	-1.65872	0.665762	-4.97258	-1.82634	-2.88917	-6.52476	-7.21444
150	-2.09401	-3.36594	-3.72518	-0.43177	1.443648	-0.04629	-0.34309	-6.7472	-2.73807	-4.53406	-3.665	-6.023	-7.21444
165	-2.09401	-3.89542	-4.65795	-1.54284	-0.68216	2.509777	2.03317	1.604114	-0.04696	-2.71868	-1.6849	-3.77944	-7.21444
180	-2.09401	-3.03348	-4.31258	-5.77254	-4.93641	-1.96499	-0.52905	0.211064	-0.39216	-1.53471	-1.58016	-2.07945	-7.21444
195	-2.09401	-2.03128	-3.39261	-5.48701	-3.07591	-4.77323	-0.79994	-1.11302	-1.81903	-0.65246	-0.90384	-0.79347	-7.21444
210	-2.09401	-1.53698	-3.20546	-3.16111	-0.47627	-2.94873	-1.29305	-0.98635	-1.12646	-0.04314	-0.3152	-0.21673	-7.21444
225	-2.09401	-1.27585	-3.63527	-2.86646	-1.39462	-1.21305	-0.91256	-0.86366	-2.49293	0.390806	0.36772	-0.00681	-7.21444
240	-2.09401	-1.49641	-4.83348	-2.19701	-3.94854	-0.86614	-2.25081	0.436586	-0.21614	0.462938	-0.10775	-0.06872	-7.21444
255	-2.09401	-1.83835	-4.75944	-2.51993	-2.94085	-1.932	-1.20485	-2.45667	0.402947	-1.75039	-1.35399	-0.71007	-7.21444
270	-2.09401	-1.91566	-4.43529	-4.13993	-2.45811	-6.23213	-1.28816	-6.9295	-1.65761	0.296799	-1.9625	-2.51723	-7.21444
285	-2.09401	-1.88281	-5.10416	-4.59499	-2.07022	-7.11033	-2.53773	-7.24592	-1.53894	-1.0713	-4.76539	-5.55492	-7.21444
300	-2.09401	-1.95725	-6.5645	-5.58241	-5.1554	-4.96604	-5.8054	-5.05463	-1.92554	-6.13047	-4.43648	-6.99568	-7.21444
315	-2.09401	-1.93837	-7.03618	-8.95121	-4.52443	-3.39382	-8.31949	-7.9478	-6.61524	-1.61341	-4.17286	-5.22323	-7.21444
330	-2.09401	-2.18261	-6.62411	-5.97384	-7.07583	-3.59309	-5.59271	-4.08591	0.145518	-0.8456	-5.19905	-4.16271	-7.21444
345	-2.09401	-1.93624	-4.96641	-4.69443	-5.77974	-1.97243	-2.36115	-4.89888	-1.29955	-1.31515	-4.75033	-3.77851	-7.21444
360	-2.09401	-1.97483	-4.0025	-2.57756	-1.42375	-6.3512	-4.66393	-4.9683	-4.37314	-2.45341	-3.00474	-3.771	-7.21444
Max Combination Ga		2.509777											

✓ 2 ANT combine correlated for 5300MHz

Phi\Theta	0	15	30	45	60	75	90	105	120	135	150	165	180
0	0.547879	0.174792	-1.31314	-0.06387	1.070737	-3.36772	-1.75788	-2.82318	-1.59	-0.02183	-2.28637	-1.91254	-4.23928
15	0.547879	-0.34283	-2.59186	-2.90566	0.63369	-1.17386	-4.38098	-2.80314	0.45649	-0.60276	-1.32637	-2.00811	-4.23928
30	0.547879	-2.00144	-2.01921	-4.80747	-3.15142	0.776233	-0.54642	-2.7493	-1.20458	-1.42118	0.101991	-1.40074	-4.23928
45	0.547879	-4.25383	-2.41714	-4.73578	-2.17446	1.252134	3.288741	-1.3584	0.960294	0.013522	-0.40652	-0.41151	-4.23928
60	0.547879	-5.02703	-1.69944	-3.42424	0.781526	2.155218	2.647486	1.037642	1.731815	2.723507	0.072475	-0.46862	-4.23928
75	0.547879	-3.89035	0.574792	-2.18079	1.41255	3.790217	0.847167	-0.61711	1.325063	2.301391	0.587063	-0.95915	-4.23928
90	0.547879	-3.24873	1.362805	1.20521	2.052529	3.387271	2.432509	-0.82777	-0.96921	1.141658	-0.05213	-0.70049	-4.23928
105	0.547879	-2.80017	2.120217	2.834598	2.368889	2.072475	2.912456	-0.24918	-1.25968	2.482432	1.216123	-0.62965	-4.23928
120	0.547879	-1.44968	1.435313	3.602967	3.997619	1.585023	2.99651	-1.60968	-0.03469	0.966339	2.559214	-1.39139	-4.23928
135	0.547879	-0.16764	-0.94494	3.569933	2.794202	1.67822	0.875307	3.665693	-1.96349	0.93237	0.118214	-3.95472	-4.23928
150	0.547879	-0.45403	-0.99978	2.033578	3.665043	1.974285	1.782532	-3.91451	-0.13288	-1.7196	-0.6547	-3.3056	-4.23928
165	0.547879	-0.91232	-1.72547	1.179135	0.337636	4.369705	4.44484	3.881918	2.495139	0.271007	1.288013	-0.81418	-4.23928
180	0.547879	-0.02394	-1.30349	-2.85006	-1.9553	0.578453	2.018412	2.46369	2.549768	1.366844	0.43442	0.831731	-4.23928
195	0.547879	0.964683	-0.50667	-2.62797	-0.07265	-2.26364	2.01255	1.43177	0.938592	2.238265	0.868481	2.049419	-4.23928
210	0.547879	1.446891	-0.33268	-0.34568	2.532165	-0.76616	1.343851	1.235043	1.829908	2.740002	2.106445	2.521058	-4.23928
225	0.547879	1.732378	-0.6423	-0.51822	1.543598	1.423851	1.975784	1.062846	-0.39433	3.279942	2.892285	2.561912	-4.23928
240	0.547879	1.484695	-1.82394	0.662026	-1.30914	2.055652	-0.37319	3.37667	2.705652	3.464278	2.10022	2.465307	-4.23928
255	0.547879	0.987708	-1.79418	0.408618	0.002891	1.022166	1.595699	0.551963	3.411774	1.055173	-0.1033	1.980479	-4.23928
270	0.547879	0.599387	-1.53833	-1.21138	0.252369	-3.23823	1.48554	-3.98396	1.260007	3.306199	0.37991	0.144412	-4.23928
285	0.547879	0.045185	-2.48492	-1.58969	0.533687	-4.28811	-0.24074	-4.63944	0.71369	1.880053	-1.99064	-2.90805	-4.23928
300	0.547879	-0.44182	-5.40336	-2.66978	-2.1474	-2.73274	-2.7974	-2.11149	0.451677	-3.18199	-1.80711	-3.99753	-4.23928
315	0.547879	-0.45617	-4.71716	-5.95279	-1.51691	-0.53391	-5.38379	-5.04474	-4.40428	0.818171	-1.63479	-2.71364	-4.23928
330	0.547879	-0.59804	-4.16856	-4.20152	-4.1859	-1.52302	-3.02135	-1.08265	1.802293	1.004029	-2.65159	-1.94877	-4.23928
345	0.547879	-0.03199	-2.1959	-2.3637	-2.82669	-0.02659	0.293133	-2.06059	0.869551	0.262566	-2.69076	-1.84309	-4.23928
360	0.547879	0.174792	-1.31314	-0.06387	1.070737	-3.36772	-1.75788	-2.82318	-1.59	-0.02183	-2.28637	-1.91254	-4.23928
Max Combination Ga		4.44484											

✓ 2 ANT combine uncorrelated for 5600MHz

Phi\Theta	0	15	30	45	60	75	90	105	120	135	150	165	180
0	-3.50016	-4.10908	-3.43451	-5.81795	-1.39805	-5.00485	-3.08901	-2.25123	-1.36848	-3.33846	-3.70682	-2.28015	-6.32858
15	-3.50016	-4.4949	-2.20302	-6.71476	-2.85451	-2.51293	-2.46163	-3.16888	-5.1631	-1.78325	-0.8997	-1.46464	-6.32858
30	-3.50016	-4.45301	-3.22878	-4.68464	-8.32493	-1.31846	-1.48593	-0.22683	-1.534	-5.4781	-3.98811	-1.2106	-6.32858
45	-3.50016	-5.27835	-5.09454	-0.9981	-2.20873	-0.36042	-0.26488	-2.85696	-3.78827	-1.80336	-6.60583	-1.73447	-6.32858
60	-3.50016	-5.75895	-2.81871	-0.84522	-1.78707	-0.48774	0.226922	-0.98696	-1.41547	-0.36504	-6.31036	-2.14171	-6.32858
75	-3.50016	-5.91032	-1.61151	-2.41976	-3.1516	-1.00282	1.044687	-3.16278	-1.43554	-1.61494	-5.40996	-2.91545	-6.32858
90	-3.50016	-6.8729	-2.45106	-1.64109	-1.9436	-3.52213	-0.02033	-2.79626	-2.77275	-1.19327	-5.56122	-3.55894	-6.32858
105	-3.50016	-8.01894	-3.54974	-1.07809	-1.30944	-2.84908	-0.78273	-0.57679	-4.535	-1.16902	-5.03334	-4.83916	-6.32858
120	-3.50016	-8.06926	-4.09207	-1.46974	-0.20774	-0.92316	-1.52004	-2.32707	-4.79734	-1.74421	-1.51592	-5.77236	-6.32858
135	-3.50016	-7.54888	-7.67705	-1.88944	0.686685	1.599658	0.705456	0.626576	-5.19585	-2.61634	-1.69804	-7.20261	-6.32858
150	-3.50016	-5.16085	-11.0553	-2.93005	-1.83197	-0.47476	-0.19633	-2.89353	-7.00171	-5.19885	-2.00082	-5.93463	-6.32858
165	-3.50016	-3.76641	-8.07895	-6.31323	-3.18855	-0.03952	2.457933	3.032541	0.472118	-1.56251	-1.9292	-3.80646	-6.32858
180	-3.50016	-3.52972	-4.644	-4.31286	-3.23963	-4.71242	-4.51946	-0.99575	-2.67256	-4.66316	-4.31282	-2.37138	-6.32858
195	-3.50016	-3.7834	-3.63494	-2.59054	-1.60636	-3.90251	-0.40878	-2.85571	-1.802	-1.75752	-3.72368	-1.47341	-6.32858
210	-3.50016	-4.11118	-4.51324	-2.14994	-1.93971	-1.0152	0.881356	-0.17999	-0.41628	-0.93897	-1.79786	-1.48444	-6.32858
225	-3.50016	-5.09592	-4.91913	-2.89266	-0.43581	-0.15888	-0.7419	-0.08397	-1.65872	0.077444	-0.40174	-2.22963	-6.32858
240	-3.50016	-6.12085	-5.15499	-2.59947	-2.83302	-0.71115	-2.44635	0.460563	-1.47074	-0.24633	-0.22439	-2.4054	-6.32858
255	-3.50016	-6.69393	-5.7472	-2.46835	-3.73756	-1.3873	-3.27871	-1.74545	-0.90092	-1.12916	-1.16241	-2.6866	-6.32858
270	-3.50016	-6.15701	-5.6829	-4.0043	-3.15868	-3.95907	-2.93464	-4.04016	-3.11741	-0.33012	-2.0928	-3.38447	-6.32858
285	-3.50016	-5.70629	-4.60583	-6.29233	-3.42426	-4.57625	-1.65293	-8.29347	-1.40592	-3.96552	-4.44048	-4.36118	-6.32858
300	-3.50016	-4.89728	-4.58254	-7.87329	-4.28499	-3.21005	-5.17242	-2.6219	-4.81275	-1.53318	-5.28734	-4.32117	-6.32858
315	-3.50016	-3.65031	-5.49032	-10.765	-5.69748	-1.7592	-5.51098	-6.17865	-2.29626	-2.37945	-5.62627	-3.89363	-6.32858
330	-3.50016	-2.70681	-4.88947	-9.93241	-5.04945	-5.26262	-6.26852	-3.44385	-3.66517	-5.82797	-4.68888	-4.17305	-6.32858
345	-3.50016	-2.90628	-3.94836	-5.96858	-5.15133	-8.01587	-4.99409	-4.86844	-2.21922	-5.43947	-4.13976	-4.08864	-6.32858
360	-3.50016	-4.10908	-3.43451	-5.81795	-1.39805	-5.00485	-3.08901	-2.25123	-1.36848	-3.33846	-3.70682	-2.28015	-6.32858
Max Combination Ga		3.032541											

✓ 2 ANT combine correlated for 5600MHz

Phi\Theta	0	15	30	45	60	75	90	105	120	135	150	165	180
0	-0.49228	-1.23213	-0.83318	-2.88547	1.317043	-4.20221	-0.52823	-1.03093	1.058845	-1.2909	-1.82181	-0.43933	-4.22398
15	-0.49228	-1.52199	0.34177	-4.53968	-0.25318	0.05183	0.470208	-0.33059	-3.9509	-0.82927	0.5471	0.367383	-4.22398
30	-0.49228	-1.46614	-0.63003	-2.21371	-5.31466	0.328503	-0.33148	2.18484	-0.16896	-2.53079	-2.31586	0.931524	-4.22398
45	-0.49228	-2.28634	-2.09944	1.9271	0.572325	1.669146	1.227907	-0.31486	-1.7257	0.487725	-3.7159	0.842143	-4.22398
60	-0.49228	-2.75417	0.077486	2.025024	1.157271	2.521428	2.778393	0.558083	0.621589	2.039482	-3.35453	0.707548	-4.22398
75	-0.49228	-2.90486	1.128519	0.266028	-0.16295	1.946819	3.50724	-1.27038	0.941677	0.753605	-3.33538	0.050308	-4.22398
90	-0.49228	-3.86365	0.395476	0.808839	1.00889	-0.52823	2.039243	-0.83998	-0.07866	0.13822	-3.33386	-0.63578	-4.22398
105	-0.49228	-5.02414	-0.59669	1.627737	1.655817	0.148282	2.057405	1.851951	-1.69857	0.47654	-2.03884	-2.06971	-4.22398
120	-0.49228	-5.18252	-1.1551	1.483312	2.801428	1.745786	1.465351	0.228397	-1.82818	0.37991	1.09056	-3.16975	-4.22398
135	-0.49228	-4.80775	-4.68568	1.075817	3.607093	4.249	3.439887	3.591329	-2.18762	-1.09823	0.822456	-4.31667	-4.22398
150	-0.49228	-2.21711	-8.22833	-0.43281	0.788548	2.095277	2.60017	0.103556	-4.15245	-2.18912	0.97255	-2.99149	-4.22398
165	-0.49228	-0.7853	-5.40275	-3.80364	-0.57184	1.55329	3.63028	5.066605	2.373397	1.439053	0.950235	-0.85009	-4.22398
180	-0.49228	-0.52955	-2.63541	-1.77479	-0.84801	-1.71589	-3.67545	1.656061	0.28435	-1.99421	-1.36318	0.597313	-4.22398
195	-0.49228	-0.78139	-1.2664	-0.77022	1.011618	-1.67664	2.189971	-0.26733	1.152166	1.249043	-2.01741	1.46667	-4.22398
210	-0.49228	-1.15001	-2.76113	0.031132	0.190412	0.754228	2.725115	1.786728	2.512931	1.991563	0.279718	1.490725	-4.22398
225	-0.49228	-2.1546	-3.17997	-1.4884	2.403406	1.188696	1.610699	1.787741	0.875307	2.965784	1.880499	0.753075	-4.22398
240	-0.49228	-3.1943	-2.61155	0.044909	-0.28823	1.943133	-0.22496	3.425817	0.696864	2.55017	1.767732	0.292234	-4.22398
255	-0.49228	-3.78788	-2.91451	0.523663	-1.22387	1.601702	-0.38251	1.220308	1.72592	1.640294	0.674018	-0.24936	-4.22398
270	-0.49228	-3.29797	-2.67365	-0.99935	-0.16899	-1.17076	-0.46371	-1.03228	-0.1084	2.665264	0.671298	-0.80786	-4.22398
285	-0.49228	-2.87643	-1.7159	-3.46437	-0.42182	-1.7869	0.91183	-5.45058	0.533972	-1.20249	-1.74049	-1.40001	-4.22398
300	-0.49228	-2.05256	-1.66006	-5.06873	-1.27969	-0.21968	-2.17589	-0.2693	-2.11866	0.906889	-2.31818	-1.40426	-4.22398
315	-0.49228	-0.95503	-2.48486	-8.20152	-2.89092	1.120235	-2.50519	-3.17152	-0.33998	0.132867	-2.61784	-1.15027	-4.22398
330	-0.49228	-0.13809	-2.24509	-7.01978	-2.13827	-2.3791	-3.28388	-0.96458	-1.98585	-2.85106	-1.85059	-1.53615	-4.22398
345	-0.49228	-0.26563	-1.77776	-3.11842	-2.47633	-5.06226	-2.41093	-2.19707	-0.87289	-2.79509	-1.45397	-1.81379	-4.22398
360	-0.49228	-1.23213	-0.83318	-2.88547	1.317043	-4.20221	-0.52823	-1.03093	1.058845	-1.2909	-1.82181	-0.43933	-4.22398
Max Combination Ga		5.066605											

✓ 2 ANT combine uncorrelated for 5800MHz

Phi\Theta	0	15	30	45	60	75	90	105	120	135	150	165	180
0	-4.47212	-4.1516	-3.91888	-9.44875	-7.09024	-3.03848	-4.48756	-1.33765	0.255356	-0.91074	-0.33403	-0.8019	-4.36933
15	-4.47212	-3.54995	-3.58581	-5.13213	-5.62126	-0.60409	-3.20172	-2.21477	-3.434	-2.42706	0.849237	-0.1933	-4.36933
30	-4.47212	-4.79068	-5.10179	-3.18959	-3.53889	-3.69591	-3.80613	-4.28626	-1.06429	-2.82023	-3.04416	-0.47694	-4.36933
45	-4.47212	-6.7454	-4.2334	-2.11429	-1.81519	-6.51885	-1.69134	-0.9531	-4.00744	-0.61909	-3.44081	-1.88494	-4.36933
60	-4.47212	-6.87059	-4.16494	-4.69282	-4.80172	-2.46499	-1.26875	-0.80624	0.140805	-1.27618	-3.52376	-3.1269	-4.36933
75	-4.47212	-6.5109	-5.12807	-4.20956	-2.82314	-2.36533	-2.09496	-5.0556	-0.44724	-1.51359	-1.69158	-4.1954	-4.36933
90	-4.47212	-7.08379	-4.54545	-3.26934	-0.80145	0.076039	-1.61795	-1.89375	-3.1457	-5.04904	-1.04509	-5.36476	-4.36933
105	-4.47212	-7.40458	-3.12004	-3.98036	-0.23691	0.616603	-0.88106	0.22625	-2.61854	-5.53444	-3.39629	-6.32146	-4.36933
120	-4.47212	-9.10447	-3.82708	-2.65633	-0.72058	-0.63275	-3.80306	-1.92756	-1.49004	-2.70319	-4.21734	-5.94081	-4.36933
135	-4.47212	-9.28673	-6.05502	-3.50004	0.272186	2.000549	1.900397	0.561588	-3.54916	-3.23613	-1.98892	-6.37554	-4.36933
150	-4.47212	-8.22111	-7.50454	-4.90393	-4.08347	-1.30685	-0.77271	-1.38197	-2.58285	-4.45342	-2.11667	-6.72806	-4.36933
165	-4.47212	-5.41587	-6.88835	-7.20417	-4.33329	-1.8282	1.603743	1.856018	1.680907	-1.60629	-1.80535	-5.1567	-4.36933
180	-4.47212	-4.25566	-2.30699	-1.33177	-0.03283	-2.47555	-3.39188	-1.87636	-3.52047	-9.25571	-3.51657	-3.0529	-4.36933
195	-4.47212	-4.15797	-3.14346	-2.35101	-1.14485	-3.35775	-0.78275	-2.89139	-2.95424	-2.77145	-4.32899	-1.61051	-4.36933
210	-4.47212	-5.13795	-3.30103	-1.52271	-1.14815	-0.02617	0.639989	0.060805	0.361478	0.498719	-2.47361	-1.58927	-4.36933
225	-4.47212	-5.46884	-2.6156	-1.6825	-0.97581	1.159057	1.309198	0.71691	-1.11502	0.23607	-1.13511	-2.62005	-4.36933
240	-4.47212	-5.65652	-3.10115	-2.15835	-0.34104	0.482921	0.766836	0.264781	-1.73286	-0.05894	-1.01987	-3.09437	-4.36933
255	-4.47212	-5.89047	-3.61239	-1.06251	-1.10744	0.317633	-2.26687	-0.44885	-1.00311	-0.04522	-1.18064	-2.92364	-4.36933
270	-4.47212	-5.67306	-2.99485	-2.18835	-2.58027	-1.06858	-3.43493	-2.10746	-2.95197	0.675141	-2.82939	-2.67939	-4.36933
285	-4.47212	-5.70094	-2.13462	-4.59723	-3.29291	-1.50687	-0.17237	-6.84106	-0.99124	-2.55363	-4.95696	-3.05237	-4.36933
300	-4.47212	-4.90707	-2.96968	-5.73995	-3.34384	-2.70404	-4.18016	-2.52327	-5.4809	-1.96141	-3.41373	-3.79391	-4.36933
315	-4.47212	-4.22664	-5.27601	-6.13309	-5.88483	-3.36342	-4.18774	-4.94263	-2.37033	-3.53427	-2.75301	-3.75106	-4.36933
330	-4.47212	-4.75163	-3.6672	-4.6873	-3.71861	-6.60821	-7.27926	-5.08382	-5.46084	-4.56634	-1.50653	-3.56005	-4.36933
345	-4.47212	-5.3049	-4.05858	-5.10835	-3.51099	-7.06331	-4.97705	-3.47809	-1.13429	-3.32595	-2.76489	-2.85517	-4.36933
360	-4.47212	-4.1516	-3.91888	-9.44875	-7.09024	-3.03848	-4.48756	-1.33765	0.255356	-0.91074	-0.33403	-0.8019	-4.36933

Max Combination Ga 2.000549

✓ 2 ANT combine correlated for 5800MHz

Phi\Theta	0	15	30	45	60	75	90	105	120	135	150	165	180
0	-1.5767	-1.16295	-1.08059	-6.44906	-5.15779	-0.61116	-1.86451	0.447715	2.726285	1.256864	1.80359	0.604912	-2.65307
15	-1.5767	-0.53968	-0.74659	-2.13823	-2.71895	1.979074	-0.2772	0.795417	-1.09305	-0.61988	2.950842	1.174255	-2.65307
30	-1.5767	-1.79003	-2.42197	-0.17949	-0.62554	-1.69031	-1.97703	-1.54401	1.098815	0.011512	-1.25153	1.19814	-2.65307
45	-1.5767	-3.77719	-1.23139	0.833611	1.002187	-3.50912	0.462779	1.159012	-2.2869	1.696994	-0.77064	0.464747	-2.65307
60	-1.5767	-3.88989	-1.7964	-1.74318	-1.8772	0.078453	1.730939	1.098008	2.156883	1.042835	-1.00735	-0.20718	-2.65307
75	-1.5767	-3.97148	-2.52288	-1.54914	-0.04	0.558512	0.468475	-3.20597	1.645355	0.377325	-0.10427	-1.1874	-2.65307
90	-1.5767	-4.85942	-1.57969	-0.53267	2.164802	3.085819	1.229498	0.600737	-0.2534	-3.26657	1.050509	-2.38448	-2.65307
105	-1.5767	-5.49737	-0.13465	-1.02453	2.722149	3.61861	1.965476	2.720737	0.356177	-3.14713	-0.56643	-3.87998	-2.65307
120	-1.5767	-6.60311	-1.04917	0.14017	2.213195	2.351501	-1.09956	0.586126	1.237619	-0.83	-1.24818	-4.06319	-2.65307
135	-1.5767	-6.28805	-3.15575	-0.77238	2.859263	4.512867	4.264601	3.045023	-0.77971	-1.40703	0.885532	-3.99832	-2.65307
150	-1.5767	-5.40568	-4.77011	-1.99788	-1.17521	1.689397	1.798645	1.48912	0.271767	-1.66304	0.891963	-3.89256	-2.65307
165	-1.5767	-2.46226	-4.06229	-4.19428	-1.38835	0.414027	3.592876	3.538164	3.996994	1.214003	1.108714	-2.15305	-2.65307
180	-1.5767	-1.25003	0.255122	1.133578	2.415696	-0.75071	-0.73269	0.741618	-0.80192	-6.30957	-0.83916	-0.04365	-2.65307
195	-1.5767	-1.16117	-1.32898	-0.27793	1.655699	-1.05047	2.201501	-0.02542	0.045693	0.194802	-1.37877	1.392553	-2.65307
210	-1.5767	-2.2905	-0.74158	1.048645	1.668254	2.261974	3.0744	2.076883	3.346115	3.494683	0.116069	1.380854	-2.65307
225	-1.5767	-2.81333	0.091391	0.65991	1.834714	2.633341	3.690745	2.842532	1.784245	3.142117	1.373107	0.370323	-2.65307
240	-1.5767	-2.99978	-0.73839	0.667708	2.522354	2.944074	3.435786	3.235374	0.805211	2.864223	0.648162	-0.10434	-2.65307
255	-1.5767	-3.17192	-1.23228	1.939053	1.384294	3.193755	0.153351	2.560876	1.705048	2.925374	0.382053	-0.16385	-2.65307
270	-1.5767	-2.92528	-0.1943	0.557218	-0.32913	1.781578	-0.42466	0.84447	-0.08088	3.68537	-0.14838	0.00162	-2.65307
285	-1.5767	-2.94007	0.86301	-2.83214	-0.67876	0.913351	2.703755	-4.36735	1.398948	0.18973	-2.04944	-0.17624	-2.65307
300	-1.5767	-2.3516	0.032967	-2.72968	-0.36649	0.214274	-1.17228	0.438932	-2.94148	1.017211	-0.40407	-0.78666	-2.65307
315	-1.5767	-1.6266	-2.42228	-3.4203	-3.73521	-0.39867	-1.17857	-2.01275	0.208908	-0.60114	0.233857	-0.90452	-2.65307
330	-1.5767	-1.81979	-1.02157	-1.6983	-0.709	-4.14007	-4.80416	-2.22391	-3.33222	-1.80763	1.349862	-1.06281	-2.65307
345	-1.5767	-2.33199	-1.20842	-2.17075	-0.76653	-4.24205	-1.98568	-0.77226	1.028815	-0.44082	-0.32624	-0.7881	-2.65307
360	-1.5767	-1.16295	-1.08059	-6.44906	-5.15779	-0.61116	-1.86451	0.447715	2.726285	1.256864	1.80359	0.604912	-2.65307

Max Combination Ga 4.512867

Appendix C

✓ 4 ANT combine uncorrelated for 6175MHz

Phi\Theta	0	15	30	45	60	75	90	105	120	135	150	165	180
0	-2.81967	-1.81645	-0.99962	-1.25034	-1.07611	-0.66395	-1.84434	-3.01095	-2.71536	-1.7333	-7.27637	-4.9317	-3.89816
15	-2.81967	-1.57712	-1.75044	-2.64398	-2.11583	-0.63829	-0.70793	-1.52079	-1.10511	-0.89841	-3.03795	-4.86527	-3.89816
30	-2.81967	-2.41211	-2.56855	-0.13523	-1.1072	-1.9084	-1.80002	-1.17231	0.135506	-0.99073	-2.11846	-4.70486	-3.89816
45	-2.81967	-2.78792	-0.86733	-1.61455	-1.25618	-2.00268	0.209949	-0.53222	-1.99509	0.220267	-3.08656	-5.37594	-3.89816
60	-2.81967	-2.5065	-1.50791	-1.4755	-1.70743	-1.00405	-0.63811	-2.33774	-5.72562	-1.93913	-3.44809	-6.65834	-3.89816
75	-2.81967	-2.1411	-1.22695	-1.35049	-2.09245	-0.71253	-0.71909	-1.12554	-5.26189	-3.23209	-2.35804	-6.85345	-3.89816
90	-2.81967	-2.51734	-0.8184	-1.67329	-1.40319	-0.87556	-2.5871	-2.74113	-5.48858	-2.35018	-2.12103	-6.17748	-3.89816
105	-2.81967	-2.83455	-0.32858	-2.3502	-0.97431	-0.6607	-1.51345	-2.33187	-3.52787	-3.06902	-3.30425	-6.11618	-3.89816
120	-2.81967	-3.97008	-0.31655	-1.41014	-0.24356	-1.35985	-0.76697	-2.7469	-2.88331	-3.40416	-2.63077	-5.46517	-3.89816
135	-2.81967	-3.46943	-3.00211	-3.57674	-1.33152	-2.42066	-2.6077	-3.37216	-0.95117	-4.44615	-0.53272	-4.23627	-3.89816
150	-2.81967	-2.03222	-4.63298	-4.40451	-4.84016	-4.04086	-1.49694	-1.95346	-2.33655	-2.27139	-0.78428	-2.66373	-3.89816
165	-2.81967	-1.18896	-1.38104	-2.85331	-3.5711	-2.18575	-2.60127	-2.51284	-1.36324	-2.55375	-5.23511	-3.20354	-3.89816
180	-2.81967	-0.96945	-3.07618	-2.84475	-1.77449	-1.88643	-3.16714	-3.18161	-2.45689	-3.95429	-3.28665	-4.09149	-3.89816
195	-2.81967	-2.47316	-3.61927	-1.95403	-3.70362	-1.83544	-1.56656	-1.47529	-2.26386	-4.21115	-5.06332	-5.10883	-3.89816
210	-2.81967	-3.75679	-2.1341	-2.19649	-1.02098	-2.96437	-3.50751	-3.5487	-3.59484	-5.65492	-5.37619	-5.11306	-3.89816
225	-2.81967	-3.51194	-0.63703	-2.35597	-4.22038	-0.97602	-0.26606	-1.20043	-1.34151	-3.27546	-4.11184	-4.51552	-3.89816
240	-2.81967	-2.72027	-0.48767	-5.22694	-2.47689	-2.35997	-1.13877	-2.57621	-3.58552	-3.64828	-3.72628	-4.46786	-3.89816
255	-2.81967	-2.28995	-1.11424	-2.90221	-1.89081	-2.45388	-4.96377	-4.43249	-3.01053	-4.11492	-4.37721	-4.87194	-3.89816
270	-2.81967	-2.22519	-1.54714	-1.9231	-3.22928	-2.22618	-1.65938	-1.82519	-3.09746	-3.526	-5.78698	-4.1467	-3.89816
285	-2.81967	-1.87193	-2.0227	-0.94224	-3.27334	-0.75073	-2.75479	-2.57143	-2.21926	-2.96493	-4.06119	-3.37319	-3.89816
300	-2.81967	-1.81128	-1.9384	-2.26773	-3.76465	-1.94018	-2.68272	-2.25634	-1.61331	-1.43091	-2.55763	-3.60075	-3.89816
315	-2.81967	-2.95462	-3.11762	-4.00399	-1.68211	-2.31881	-0.26435	0.115672	0.227352	-0.68307	-2.98013	-4.09398	-3.89816
330	-2.81967	-5.22872	-4.44597	-3.11731	-4.99092	-3.67857	-3.65746	-4.33726	-6.23386	-3.19141	-3.03206	-4.05449	-3.89816
345	-2.81967	-5.01825	-5.13223	-4.86905	-5.5542	-3.97201	-3.45942	-3.42813	-3.51276	-3.12739	-3.44616	-4.10212	-3.89816
360	-2.81967	-1.81645	-0.99962	-1.25034	-1.07611	-0.66395	-1.84434	-3.01095	-2.71536	-1.7333	-7.27637	-4.9317	-3.89816
Max Combination Ga		0.227352											

✓ 4 ANT combine correlated for 6175MHz

Phi\Theta	0	15	30	45	60	75	90	105	120	135	150	165	180
0	2.963074	3.810215	4.795253	4.316472	4.188682	4.514141	3.547158	2.791032	3.049792	4.20185	-1.33929	1.03003	2.039505
15	2.963074	3.705569	3.973763	3.308443	3.683987	5.128874	4.671829	3.951776	4.177441	4.538735	2.559349	0.590939	2.039505
30	2.963074	2.371952	3.27704	5.630232	4.379217	3.78145	3.95677	4.227391	5.557954	4.039535	2.9823	0.760501	2.039505
45	2.963074	2.593768	4.717609	3.155628	4.272608	3.662015	5.912725	5.077934	3.621034	5.309894	2.587555	0.335236	2.039505
60	2.963074	2.995851	3.453973	4.084489	4.213417	4.877605	5.201776	2.895214	0.211174	3.731382	2.526385	-0.72479	2.039505
75	2.963074	3.520535	4.069683	4.431586	3.774815	5.062257	4.831074	4.572433	0.557686	2.572266	3.515772	-1.00751	2.039505
90	2.963074	3.212409	4.705274	4.223401	4.347971	5.124626	3.355607	2.724524	0.214495	3.537166	3.298447	-0.53946	2.039505
105	2.963074	3.043651	5.13966	3.570039	4.667152	5.193845	4.408111	3.465241	2.123532	2.746752	2.522024	-0.40376	2.039505
120	2.963074	2.008448	5.161226	4.302986	5.601968	4.267977	4.744717	3.137178	3.015146	2.414376	3.158942	0.527585	2.039505
135	2.963074	2.51418	2.818409	2.265882	4.446512	3.30199	3.171268	2.408153	4.361547	1.502339	5.274276	1.655922	2.039505
150	2.963074	3.691072	1.385363	1.543801	1.04126	1.860997	4.262089	3.638617	3.491481	2.939692	5.116976	3.222074	2.039505
165	2.963074	4.128082	3.655313	2.957878	2.37512	3.461384	2.81785	3.203947	4.182107	3.14815	0.498006	2.792451	2.039505
180	2.963074	4.317539	2.457106	2.263247	3.945163	3.913108	2.279424	2.669025	3.433329	1.681953	2.589106	1.741178	2.039505
195	2.963074	3.336652	2.0964	3.862592	2.239428	4.047808	4.224172	4.1783	3.375461	1.350028	0.723629	0.878419	2.039505
210	2.963074	1.978088	3.644216	2.95527	4.684918	2.95387	1.900141	2.174495	2.23157	0.192256	0.593658	0.794518	2.039505
225	2.963074	2.390464	4.811016	3.425453	1.769875	4.026142	4.810144	3.861524	3.415514	2.001975	1.780347	1.450322	2.039505
240	2.963074	3.235779	5.084349	0.559015	3.167318	3.569571	4.716664	3.219013	2.053296	2.243317	2.047238	1.375811	2.039505
255	2.963074	3.519642	4.58484	2.870511	3.792466	3.345859	0.547806	1.227334	2.606177	1.84423	1.613421	1.025067	2.039505
270	2.963074	3.470801	4.219637	3.808941	2.718988	3.736165	4.277369	4.020206	2.529924	2.290981	-0.27875	1.721087	2.039505
285	2.963074	3.784869	3.684423	4.977446	2.186948	4.970419	3.114722	2.851627	3.660715	2.991473	1.541166	2.111951	2.039505
300	2.963074	3.912433	3.775729	3.540844	2.110715	3.897354	3.220659	3.388097	4.138875	4.247396	3.135935	1.688795	2.039505
315	2.963074	2.927582	2.807635	1.904709	4.115794	3.293979	5.5211	5.547477	5.203019	4.477225	2.72984	1.809298	2.039505
330	2.963074	0.69617	0.793452	2.80945	0.086662	2.102404	2.32898	1.548538	-0.42554	2.040152	2.877374	1.877038	2.039505
345	2.963074	0.985159	0.792695	1.015197	0.250699	1.544689	1.947654	2.36384	2.456332	2.816352	2.204274	1.818291	2.039505
360	2.963074	3.810215	4.795253	4.316472	4.188682	4.514141	3.547158	2.791032	3.049792	4.20185	-1.33929	1.03003	2.039505
Max Combination Ga		5.912725											

✓ 4 ANT combine uncorrelated for 6475MHz

Phi\Theta	0	15	30	45	60	75	90	105	120	135	150	165	180
0	-1.83215	-3.179	-4.35476	-3.86591	-4.57468	-3.07198	-1.78794	-4.08434	-2.93221	-3.07897	-3.43132	-4.26942	-5.06096
15	-1.83215	-2.69788	-4.52471	-3.64933	-4.64227	-4.5231	-4.91831	-2.65449	-2.61088	-2.98086	-2.39869	-5.15454	-5.06096
30	-1.83215	-2.85839	-3.73214	-5.50504	-4.66925	-3.91492	-3.96925	-2.81371	-4.27075	-3.26262	-1.75911	-3.19979	-5.06096
45	-1.83215	-3.57067	-2.53712	-3.43066	-4.67006	-4.48473	-2.68314	-4.25236	-2.82652	-4.68083	-7.2	-1.36432	-5.06096
60	-1.83215	-4.42737	-2.80888	-4.92192	-4.21867	-4.82057	-4.93149	-3.53734	-3.89386	-1.92435	-4.5958	-1.73856	-5.06096
75	-1.83215	-4.927	-3.47425	-4.30024	-3.43772	-3.25315	-2.50356	-3.7442	-3.4017	-3.89302	-2.78023	-2.93502	-5.06096
90	-1.83215	-4.97971	-3.8775	-3.22719	-4.64134	-4.44616	-3.10213	-2.34137	-2.69616	-3.14715	-3.30615	-3.77874	-5.06096
105	-1.83215	-4.5803	-5.03262	-2.64819	-4.29527	-5.528	-4.97139	-3.42097	-3.23434	-3.08927	-3.86554	-3.85523	-5.06096
120	-1.83215	-3.61323	-7.61439	-2.51367	-2.50533	-5.52103	-4.89316	-3.53531	-3.29069	-4.04228	-3.59494	-3.67346	-5.06096
135	-1.83215	-2.67448	-4.5683	-5.00922	-3.52688	-1.90233	-4.85033	-4.82333	-3.87851	-3.3264	-4.40089	-4.05666	-5.06096
150	-1.83215	-2.76603	-3.57214	-4.37317	-3.11069	-5.22069	-4.16926	-4.23741	-3.36139	-2.93848	-2.67013	-4.67041	-5.06096
165	-1.83215	-3.03467	-2.69326	-3.62516	-5.6339	-4.80246	-4.14362	-4.49402	-4.80301	-3.15042	-3.97528	-5.00328	-5.06096
180	-1.83215	-2.32298	-3.92073	-5.04333	-2.95803	-4.91568	-4.94778	-4.26474	-3.95601	-3.44874	-3.76453	-4.52887	-5.06096
195	-1.83215	-2.72972	-2.93169	-2.05487	-3.79072	-3.60174	-3.71903	-4.60414	-2.96965	-3.78319	-3.9802	-5.08296	-5.06096
210	-1.83215	-4.4892	-4.46738	-4.51226	-2.15405	-4.65397	-3.51266	-4.65907	-5.06511	-5.04412	-5.00446	-5.25779	-5.06096
225	-1.83215	-5.1234	-5.89791	-3.36055	-2.9402	-3.06002	-3.89529	-2.74904	-3.36525	-3.06128	-5.38003	-4.71219	-5.06096
240	-1.83215	-4.98808	-4.25139	-6.46504	-4.06199	-4.20818	-5.58161	-4.84788	-5.24332	-2.64609	-3.42039	-4.18855	-5.06096
255	-1.83215	-4.98967	-5.18581	-4.14478	-5.28218	-4.6308	-5.25653	-4.79563	-3.3459	-5.65414	-4.10632	-3.90029	-5.06096
270	-1.83215	-4.85689	-6.18731	-4.11619	-5.30162	-4.29682	-3.68594	-5.85631	-5.06159	-3.88832	-4.98402	-4.12375	-5.06096
285	-1.83215	-4.96445	-5.46576	-4.33418	-4.65635	-3.06223	-5.36727	-6.50923	-5.9165	-3.85846	-5.79453	-3.99601	-5.06096
300	-1.83215	-5.03355	-4.88661	-4.10679	-3.92828	-3.62341	-2.38455	-6.11868	-3.00402	-3.61091	-5.90439	-3.85577	-5.06096
315	-1.83215	-5.23934	-5.18134	-3.7935	-6.04987	-5.42377	-7.19917	-3.76756	-5.25022	-5.29218	-3.97521	-4.6944	-5.06096
330	-1.83215	-6.05033	-3.55913	-6.02392	-4.7946	-4.91653	-4.56467	-3.77741	-3.27662	-3.22901	-3.86013	-4.36595	-5.06096
345	-1.83215	-5.43276	-4.05681	-5.06692	-4.61711	-4.31802	-2.3619	-3.60429	-3.71897	-3.42697	-3.7697	-3.09609	-5.06096
360	-1.83215	-3.179	-4.35476	-3.86591	-4.57468	-3.07198	-1.78794	-4.08434	-2.93221	-3.07897	-3.43132	-4.26942	-5.06096

Max Combination G: -1.36432

✓ 4 ANT combine correlated for 6475MHz

Phi\Theta	0	15	30	45	60	75	90	105	120	135	150	165	180
0	3.925549	2.672297	1.625015	1.829393	1.393189	2.610339	3.855665	1.812977	2.94855	2.914184	2.458104	1.593534	0.877427
15	3.925549	3.155607	1.223899	2.348562	1.359352	1.418416	1.097747	3.168991	3.137778	2.731451	3.390141	0.782158	0.877427
30	3.925549	2.96005	2.204146	0.442064	1.241745	2.083173	1.986882	2.946899	1.415923	2.748215	4.22591	2.794577	0.877427
45	3.925549	2.206672	3.445391	2.431555	1.325761	1.333324	3.256169	1.616463	2.951722	1.078745	-1.59627	4.642471	0.877427
60	3.925549	1.349279	3.180037	0.838722	1.753994	1.016361	0.754711	2.23635	1.886629	3.902519	1.2556	4.263059	0.877427
75	3.925549	0.491371	2.362131	1.274775	2.158458	2.497398	3.408222	2.059613	2.600918	1.681707	2.974802	2.905099	0.877427
90	3.925549	0.074689	1.954921	2.294869	1.126666	1.523881	2.915789	3.229521	2.794564	2.251498	2.639732	1.911336	0.877427
105	3.925549	0.594299	0.724308	2.700055	1.419971	0.349236	0.952265	1.908858	2.586415	2.687941	2.102404	1.961736	0.877427
120	3.925549	1.815341	-2.42133	3.207358	3.252212	0.3278	0.94987	2.375001	2.707759	1.733502	2.398787	2.298397	0.877427
135	3.925549	3.184398	1.123549	0.925588	2.367733	3.890981	1.0417	0.988926	1.992201	2.617891	1.442254	1.944093	0.877427
150	3.925549	3.003002	1.866995	1.451369	2.742459	0.731325	1.713931	1.699248	2.571733	2.974072	2.730404	1.148885	0.877427
165	3.925549	2.687381	3.082842	1.934701	0.180223	1.202169	1.743172	1.422938	1.211564	2.666709	1.816285	0.771063	0.877427
180	3.925549	2.916607	1.573564	0.2842	2.830417	0.870349	1.021096	1.651068	2.031931	2.494398	2.166146	1.451859	0.877427
195	3.925549	2.688049	2.842033	3.801185	1.919131	2.36434	2.119584	1.33865	2.847173	2.09004	1.99876	0.806727	0.877427
210	3.925549	1.460421	1.51387	1.44651	3.57765	0.836128	2.414223	1.259731	0.895162	0.963519	0.914619	0.48957	0.877427
225	3.925549	0.710523	-0.04858	2.319331	3.00633	2.830976	1.988524	3.156379	2.068263	2.913462	0.42719	1.107274	0.877427
240	3.925549	0.845887	1.679208	-0.56435	1.811112	1.570963	0.322545	1.139084	0.725735	2.664254	2.526964	1.645362	0.877427
255	3.925549	0.933471	0.714174	1.811357	0.5412	0.791375	0.749679	1.117467	2.380223	0.014876	1.8366	1.969083	0.877427
270	3.925549	1.078123	-0.19532	1.742908	0.327354	1.250646	2.118075	0.133239	0.802009	1.995323	0.878782	1.780532	0.877427
285	3.925549	0.90955	0.493682	1.625285	1.050894	2.686663	0.50716	-0.80255	0.010582	2.082719	0.199192	2.003441	0.877427
300	3.925549	0.678383	1.129774	1.590343	1.990223	2.106668	3.27536	-0.16597	2.824846	2.147773	-0.00033	2.136381	0.877427
315	3.925549	0.393779	0.757938	2.126767	-0.05604	0.427499	-1.42407	2.106218	0.729581	0.677004	1.877277	1.179922	0.877427
330	3.925549	-0.26065	2.184328	-0.14683	1.162264	1.055226	1.284458	2.0487	2.470445	2.679503	2.098654	1.499635	0.877427
345	3.925549	0.531059	1.809623	0.845834	1.098669	1.381134	3.359293	2.289948	2.258754	2.562166	2.160836	2.853616	0.877427
360	3.925549	2.672297	1.625015	1.829393	1.393189	2.610339	3.855665	1.812977	2.94855	2.914184	2.458104	1.593534	0.877427

Max Combination G: 4.642471

✓ 4 ANT combine uncorrelated for 6695MHz

Phi\Theta	0	15	30	45	60	75	90	105	120	135	150	165	180
0	-3.05092	-3.79059	-4.92358	-6.32514	-4.87915	-3.16253	-3.03333	-1.80441	-1.98203	-2.0843	-1.45258	-1.69613	-2.50286
15	-3.05092	-3.38907	-4.21159	-6.00563	-5.66671	-4.64514	-1.7279	-1.09532	-1.13902	-1.14551	-2.6207	-2.3631	-2.50286
30	-3.05092	-2.73073	-2.96195	-5.47533	-4.37216	-4.24059	-1.48743	-1.88899	-0.98483	-1.95647	-1.47532	-3.93051	-2.50286
45	-3.05092	-1.97304	-2.77463	-5.96095	-4.16356	-3.68841	-2.96632	-1.2538	-1.51535	-2.549	-1.63981	-4.03886	-2.50286
60	-3.05092	-1.64706	-2.63792	-4.49226	-6.11704	-5.10266	-3.41369	-2.47634	-0.50272	-0.79623	-4.86164	-3.43166	-2.50286
75	-3.05092	-1.5459	-2.53702	-3.82402	-5.59387	-5.08731	-5.07768	-3.74939	-2.69546	-2.14527	-6.48204	-3.37727	-2.50286
90	-3.05092	-1.46547	-3.44578	-3.0363	-4.36354	-5.3878	-4.33237	-4.12572	-2.53363	-2.64246	-4.92316	-3.80014	-2.50286
105	-3.05092	-1.54459	-3.90234	-2.28179	-2.62897	-5.01749	-5.2126	-3.47902	-3.05971	-2.51008	-4.4564	-4.03752	-2.50286
120	-3.05092	-1.90475	-2.36451	-3.48892	-2.31341	-3.83791	-4.51244	-5.07798	-2.48531	-0.2347	-3.26622	-3.39434	-2.50286
135	-3.05092	-2.79119	-2.08445	-3.1574	-4.39692	-5.16769	-5.03866	-3.87647	-5.56501	-2.53187	-2.386	-3.21739	-2.50286
150	-3.05092	-3.47595	-3.43172	-1.66142	-3.35298	-3.27871	-4.30913	-3.41396	-2.13023	-1.45467	-1.69252	-2.8713	-2.50286
165	-3.05092	-1.55604	-1.76251	-4.07953	-7.43297	-4.93242	-5.35479	-3.87448	-3.97148	-1.35841	-1.19674	-2.86445	-2.50286
180	-3.05092	-1.23449	-1.93812	-3.78746	-5.41492	-4.60396	-5.25595	-3.63932	-3.53519	-0.62149	-3.05653	-4.25734	-2.50286
195	-3.05092	-2.34393	-4.30116	-3.06759	-1.44354	-3.0708	-6.94364	-4.43838	-2.37551	-4.26361	-6.10535	-5.56133	-2.50286
210	-3.05092	-3.37847	-3.02378	-1.9843	-0.90205	-2.736	-3.33266	-7.0872	-5.38487	-6.96465	-5.82241	-4.49884	-2.50286
225	-3.05092	-3.90094	-3.06069	-4.50884	-2.62593	-2.86573	-2.16036	-5.13185	-4.1526	-6.13251	-6.88013	-4.95565	-2.50286
240	-3.05092	-4.58576	-5.51178	-4.91961	-4.17543	-4.07062	-5.0534	-3.98748	-2.87092	-3.88597	-11.528	-6.48478	-2.50286
255	-3.05092	-4.82503	-6.10636	-6.58112	-4.81246	-3.18638	-7.13777	-6.83626	-6.47355	-3.54318	-9.04304	-7.97457	-2.50286
270	-3.05092	-5.28141	-6.68298	-6.78363	-4.31036	-4.39023	-6.58883	-5.64524	-4.83689	-4.71833	-9.02142	-8.33258	-2.50286
285	-3.05092	-5.46192	-6.6172	-6.89915	-5.65184	-6.00642	-6.44613	-4.5076	-5.07516	-6.60714	-8.42931	-8.68613	-2.50286
300	-3.05092	-5.92068	-7.0963	-6.42713	-6.53393	-3.9551	-4.52333	-5.91359	-7.70218	-6.00374	-8.28593	-8.62748	-2.50286
315	-3.05092	-4.47859	-9.32466	-7.40079	-5.76398	-3.83721	-2.98316	-4.06612	-3.25759	-4.19221	-6.21539	-7.93628	-2.50286
330	-3.05092	-3.77418	-7.34524	-7.15126	-8.39487	-4.8467	-6.09889	-5.20731	-5.57902	-4.09894	-4.16546	-6.0828	-2.50286
345	-3.05092	-3.71157	-5.32483	-6.48774	-6.82297	-3.41599	-4.45451	-2.68707	-3.36442	-2.7714	-4.07363	-3.56926	-2.50286
360	-3.05092	-3.79059	-4.92358	-6.32514	-4.87915	-3.16253	-3.03333	-1.80441	-1.98203	-2.0843	-1.45258	-1.69613	-2.50286
Max Combination Ga		-0.2347											

✓ 4 ANT combine correlated for 6695MHz

Phi\Theta	0	15	30	45	60	75	90	105	120	135	150	165	180
0	2.345578	1.614368	0.517491	-0.37899	0.759096	2.190353	2.577234	3.725428	2.701683	2.960225	4.30992	4.254958	3.380029
15	2.345578	2.182398	1.50568	-0.2418	-0.29415	0.692718	3.688356	4.1342	4.047093	4.505074	3.2988	3.475689	3.380029
30	2.345578	3.187229	2.720873	0.504105	1.309515	1.097784	3.79192	3.506632	4.469017	3.668856	4.37195	1.995366	3.380029
45	2.345578	3.742779	3.017558	-0.23886	1.509728	1.980795	2.644053	4.018421	4.126473	3.071128	4.376924	1.69907	3.380029
60	2.345578	4.109905	3.189703	1.198493	-0.11609	0.71482	2.55075	3.244056	5.212149	4.79309	1.062145	2.19168	3.380029
75	2.345578	4.193113	3.385725	2.019428	0.283101	0.63542	0.763039	2.115361	2.87586	3.439406	-0.58605	2.341954	3.380029
90	2.345578	4.199628	2.374549	2.69221	1.110368	-0.57232	1.205093	1.841862	2.940751	3.138949	0.846256	1.784946	3.380029
105	2.345578	4.170587	1.696504	3.4513	3.068772	0.382283	0.358837	2.461006	2.45677	3.063545	1.05325	1.168668	3.380029
120	2.345578	3.874588	3.242618	2.144167	3.110604	1.883682	1.259382	0.696131	2.748322	5.449704	2.212188	1.995637	3.380029
135	2.345578	3.070821	3.205504	2.640925	1.298177	0.585716	-0.60367	1.435865	0.114639	2.355375	3.359742	2.654108	3.380029
150	2.345578	1.963142	1.176796	3.403252	1.547907	1.373776	-0.57293	1.684853	3.361161	4.240768	3.792284	2.728117	3.380029
165	2.345578	3.585643	3.627361	1.782467	-1.89254	0.553486	-0.85955	0.983842	1.562355	4.2418	4.547514	2.22491	3.380029
180	2.345578	3.887762	3.603138	1.484052	0.462594	0.89343	0.377435	1.426542	2.119153	4.584884	2.377446	0.065638	3.380029
195	2.345578	2.967742	1.116901	1.419336	3.233135	1.815824	-1.5684	0.65896	2.749014	1.006757	-0.73343	0.120116	3.380029
210	2.345578	1.982492	2.193266	2.620075	3.758798	2.322771	1.99222	-1.2317	0.207197	-1.35379	-0.54233	0.598412	3.380029
225	2.345578	1.592626	2.385518	0.218287	2.763999	2.344507	3.38094	0.265939	1.35344	-0.98003	-1.32043	-0.25891	3.380029
240	2.345578	0.810985	0.02644	-0.07705	1.354732	1.461571	0.647551	1.474397	2.429074	1.559621	-6.44361	-1.41886	3.380029
255	2.345578	0.691359	-0.2874	-0.93193	0.95045	2.382608	-1.18867	-1.04012	-1.28407	1.54981	-3.3326	-2.52119	3.380029
270	2.345578	0.192274	-0.89675	-1.09483	0.473479	1.459242	-0.72749	-0.31714	0.535794	0.755088	-3.17422	-2.93657	3.380029
285	2.345578	-0.03097	-1.04807	-1.24713	-0.51833	-0.32359	-0.6389	0.581705	0.588185	-0.86481	-2.64161	-3.44165	3.380029
300	2.345578	-0.68806	-1.8949	-0.80495	-1.21286	1.71759	0.852457	-0.16371	-2.66804	-0.35436	-2.87792	-2.91276	3.380029
315	2.345578	1.066691	-3.55554	-2.56427	-0.18933	1.337733	2.126455	0.560059	1.852401	1.101721	-0.5654	-2.39507	3.380029
330	2.345578	1.882985	-1.77172	-1.31172	-2.98358	0.662086	-0.76839	0.338066	-0.26318	1.468429	1.644433	-0.38892	3.380029
345	2.345578	2.062643	0.485028	-0.6002	-1.6722	2.116796	1.063401	2.776059	0.997117	2.611321	1.578331	2.2646	3.380029
360	2.345578	1.614368	0.517491	-0.37899	0.759096	2.190353	2.577234	3.725428	2.701683	2.960225	4.30992	4.254958	3.380029
Max Combination Ga		5.449704											

✓ 4 ANT combine uncorrelated for 6995MHz

Phi\Theta	0	15	30	45	60	75	90	105	120	135	150	165	180
0	-4.4587	-4.32711	-3.66269	-2.16375	-2.16683	-0.96738	-1.51648	-5.25338	-3.32653	-3.80095	-5.02064	-4.72706	-5.3722
15	-4.4587	-4.5938	-5.61691	-4.25742	-3.10393	-2.12266	-1.64695	-5.00295	-4.76596	-3.21986	-3.15306	-5.28034	-5.3722
30	-4.4587	-4.74952	-6.56141	-2.19864	-1.64992	-1.44032	-3.98315	-6.37007	-4.04862	-2.7454	-1.34684	-4.3314	-5.3722
45	-4.4587	-4.44126	-4.58883	-0.40015	-1.98169	-2.66747	-2.75934	-3.71738	-5.05976	-3.00311	-3.11244	-3.46772	-5.3722
60	-4.4587	-3.78889	-2.6637	0.494414	-0.78006	0.028074	-4.43678	-3.54245	-4.65247	-4.65073	-4.21755	-3.55575	-5.3722
75	-4.4587	-3.23219	-1.67299	0.063736	0.097368	-1.34749	-4.04255	-3.36246	-5.2912	-6.11638	-4.84753	-4.44251	-5.3722
90	-4.4587	-3.06405	-1.04631	-0.34571	0.409119	-1.35472	-3.9537	-4.01293	-5.05821	-3.74305	-5.31456	-4.54271	-5.3722
105	-4.4587	-2.73657	-1.57662	-0.31451	0.492345	-0.70642	-2.98113	-4.32926	-4.87157	-3.12365	-4.4266	-3.81572	-5.3722
120	-4.4587	-3.40115	-1.88937	-0.87637	-0.38377	-0.51205	-1.44602	-3.24779	-1.94658	-3.54482	-3.76113	-3.76406	-5.3722
135	-4.4587	-3.8764	-2.95666	-1.60593	-2.31259	-3.84032	-2.49372	-0.8147	-0.0506	-1.91731	-3.09688	-3.28453	-5.3722
150	-4.4587	-3.53854	-5.49173	-2.7101	-2.77828	-2.66214	-1.73091	-1.60211	-0.12758	-1.18265	-3.13801	-4.41509	-5.3722
165	-4.4587	-2.29218	-2.37276	-2.90216	-1.83035	-2.17198	-1.51119	-0.63834	-0.87964	-2.3676	-2.03745	-6.13599	-5.3722
180	-4.4587	-2.4272	-2.08426	-2.31361	-2.18278	-2.16796	-0.99768	-3.07375	-2.05867	-2.19367	-3.34156	-5.60647	-5.3722
195	-4.4587	-2.58955	-2.4686	-1.24086	-1.82364	-1.31129	-1.72258	-5.50791	-2.29566	-2.97995	-3.49786	-6.5902	-5.3722
210	-4.4587	-3.2213	-0.93749	-1.12746	-0.86925	-2.70277	-4.37877	-4.6006	-5.25787	-4.78664	-4.49579	-7.86674	-5.3722
225	-4.4587	-2.85752	-0.26773	-2.19718	-0.12713	-0.91414	-0.65357	-4.35559	-3.37219	-4.90481	-6.40139	-10.2154	-5.3722
240	-4.4587	-2.6842	-1.43192	-1.58807	-2.29875	-2.63421	-1.78846	-3.47472	-2.22468	-2.47923	-5.73814	-11.6052	-5.3722
255	-4.4587	-2.64036	-2.08479	-2.66188	-3.3524	-3.21672	-0.93374	-3.79879	-2.81946	-3.64077	-6.15186	-11.2869	-5.3722
270	-4.4587	-2.55538	-1.50308	-3.40545	-2.36339	-1.50419	-1.94006	-2.84524	-4.68752	-3.2018	-6.73699	-9.22794	-5.3722
285	-4.4587	-2.27859	-1.07714	-3.69159	-0.91502	-0.88142	0.477852	-2.50638	-2.13257	-4.52579	-6.42681	-8.69417	-5.3722
300	-4.4587	-2.11083	-2.20194	-3.94452	-1.09573	-1.86424	-1.38851	-2.30689	-3.28423	-4.99568	-5.50561	-7.66321	-5.3722
315	-4.4587	-2.19941	-4.18253	-3.52882	-5.50506	-3.37421	-1.24103	-4.11243	-4.07323	-4.36931	-6.90225	-7.44117	-5.3722
330	-4.4587	-2.68288	-4.9196	-2.81258	-1.94849	-3.96349	-4.09192	-5.3082	-6.77175	-8.6474	-6.79155	-5.37805	-5.3722
345	-4.4587	-4.07853	-4.68259	-3.56942	-2.18331	-2.36016	-2.39842	-4.97948	-5.72113	-6.8925	-4.55265	-4.48195	-5.3722
360	-4.4587	-4.32711	-3.66269	-2.16375	-2.16683	-0.96738	-1.51648	-5.25338	-3.32653	-3.80095	-5.02064	-4.72706	-5.3722
Max Combination Ga		0.494414											

✓ 4 ANT combine correlated for 6995MHz

Phi\Theta	0	15	30	45	60	75	90	105	120	135	150	165	180
0	0.756483	1.159628	1.89079	2.865117	2.784137	4.385358	4.051492	-0.08187	1.905254	1.927307	0.007682	0.890036	0.383088
15	0.756483	0.847094	-0.42011	1.046234	1.77983	2.751043	3.801152	-0.10522	0.152935	2.010628	1.618198	0.66239	0.383088
30	0.756483	0.907592	-0.83612	3.020514	3.486547	3.208529	0.93742	-0.70164	1.203399	3.054911	2.961939	1.678853	0.383088
45	0.756483	1.241843	0.548691	4.72874	3.386433	3.064428	3.012806	1.496424	0.732522	1.877926	1.996838	2.368723	0.383088
60	0.756483	1.955416	1.777336	5.802233	5.104061	5.803225	1.429809	2.009385	1.162935	0.452094	0.622468	2.152547	0.383088
75	0.756483	2.395956	3.451973	5.848117	5.182233	4.37459	0.869327	2.164869	0.591462	-0.38689	0.774175	1.451965	0.383088
90	0.756483	2.541172	4.543258	5.483729	5.803722	4.436988	1.148669	1.407713	0.821507	2.089588	0.29676	1.411269	0.383088
105	0.756483	2.8778	4.113859	5.55124	5.812334	5.072863	2.846334	1.463723	0.406711	2.070574	0.868054	1.956297	0.383088
120	0.756483	2.242194	3.820479	4.818194	5.484335	5.387803	4.568794	2.585533	3.404628	1.817198	2.064512	1.886687	0.383088
135	0.756483	1.837158	2.819256	4.086021	3.682544	1.743371	2.64785	4.351416	4.815451	3.363132	2.441012	2.261622	0.383088
150	0.756483	2.408442	0.405002	3.286646	2.957168	2.785587	3.867191	3.766514	4.874421	3.567729	2.182077	1.291342	0.383088
165	0.756483	3.534857	3.500591	3.010174	3.907809	3.442355	3.593268	3.884116	3.332704	3.003031	3.476573	-0.88701	0.383088
180	0.756483	3.097693	3.572008	3.095199	3.531916	3.276959	3.75738	1.912201	3.119446	2.524119	2.421235	0.012346	0.383088
195	0.756483	2.794256	3.024344	4.336597	3.783875	4.211933	3.881064	-0.39549	3.110141	2.869552	1.97394	-0.92706	0.383088
210	0.756483	2.427971	4.897929	4.436414	4.630036	2.217146	1.1463	0.728921	0.170057	0.593806	0.502996	-2.4746	0.383088
225	0.756483	2.95809	5.607789	3.676472	5.659281	4.479591	4.948899	1.305331	2.238676	0.450336	-0.7702	-4.39216	0.383088
240	0.756483	3.057059	4.452978	4.392349	3.388288	3.189176	4.138183	2.032803	3.003725	2.463135	-0.38747	-5.74069	0.383088
255	0.756483	3.150843	3.466253	3.237518	2.428485	2.66278	4.998726	1.622264	2.216037	2.029281	-0.59741	-5.48229	0.383088
270	0.756483	3.293356	4.261013	2.403319	3.181911	4.322702	4.042182	2.614787	0.638717	1.880587	-0.93949	-3.52456	0.383088
285	0.756483	3.578759	4.765093	1.909555	4.544046	4.853758	5.8341	3.108163	2.926784	1.109254	-0.91556	-2.85924	0.383088
300	0.756483	3.632592	3.775048	1.83314	4.287034	3.830101	4.278844	3.147708	2.119593	0.366616	-0.62513	-1.9193	0.383088
315	0.756483	3.386286	1.755332	2.12193	0.146571	2.199491	4.09924	1.142495	1.422098	1.223489	-1.35144	-2.23421	0.383088
330	0.756483	3.01014	0.666684	2.994423	3.677372	1.587032	1.658332	0.196275	-1.21719	-3.28317	-1.12527	-0.49542	0.383088
345	0.756483	1.896542	0.851479	2.101679	3.501482	2.492227	3.274047	0.356558	0.179021	-1.15014	0.240216	0.519924	0.383088
360	0.756483	1.159628	1.89079	2.865117	2.784137	4.385358	4.051492	-0.08187	1.905254	1.927307	0.007682	0.890036	0.383088
Max Combination Ga		5.848117											