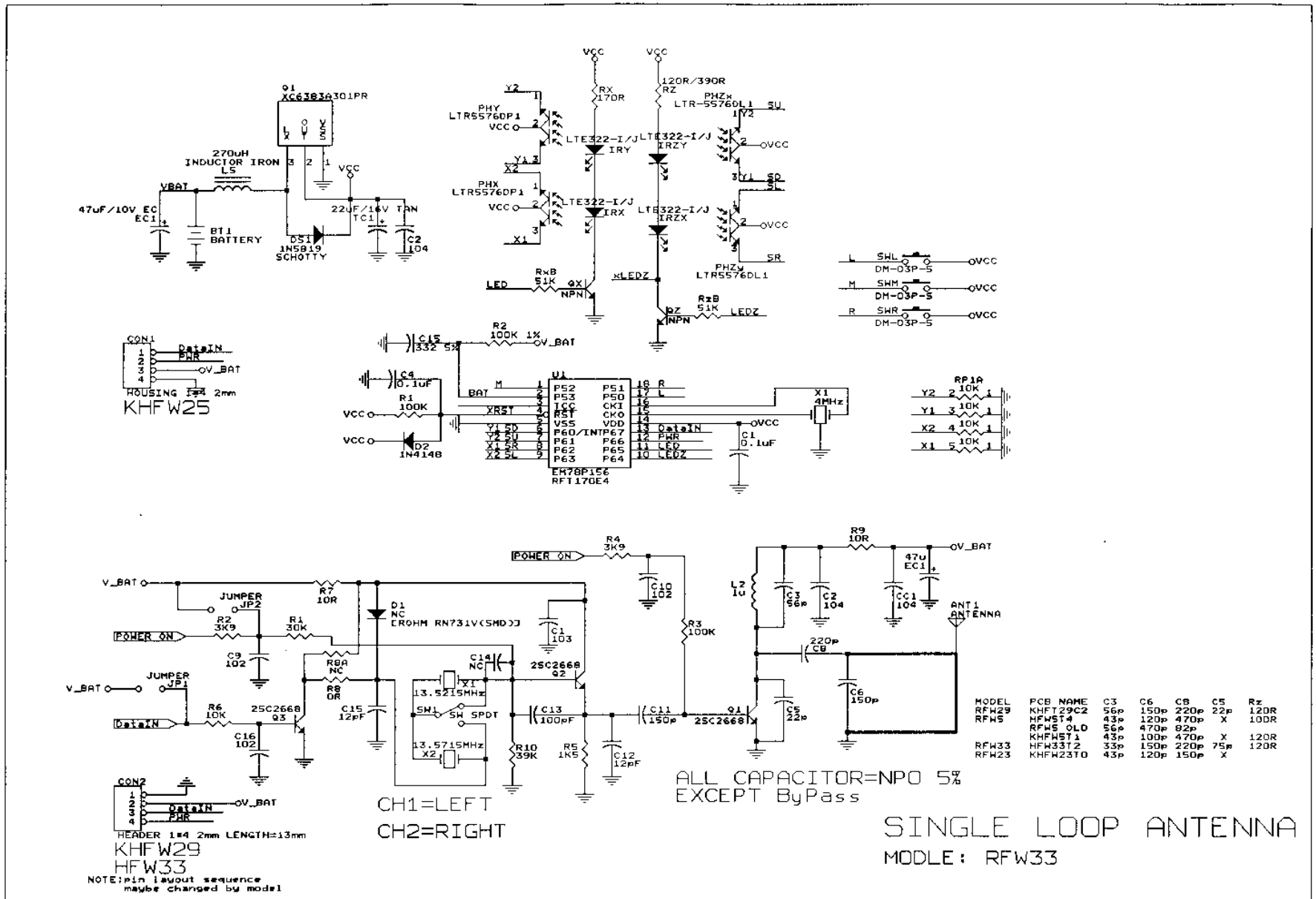

MODEL	PCB NAME	C3	C6	C8	C5	Rz
RFW29	KHFT29C2	56p	150p	220p	22p	120R
RFWS	HFWST4	43p	120p	470p	X	100R
	RFWS OLD	56p	470p	82p		
	KHFWST1	43p	100p	470p	X	120R
RFW33	HFW33T2	33p	150p	220p	75p	120R
RFW23	KHFW23T0	43p	120p	150p	X	

DAVID KING		
Size: A	Document Number: KHFTC1B.CRT	REV: 1A
Date: January 16, 2001	Sheet: 1 of 1	