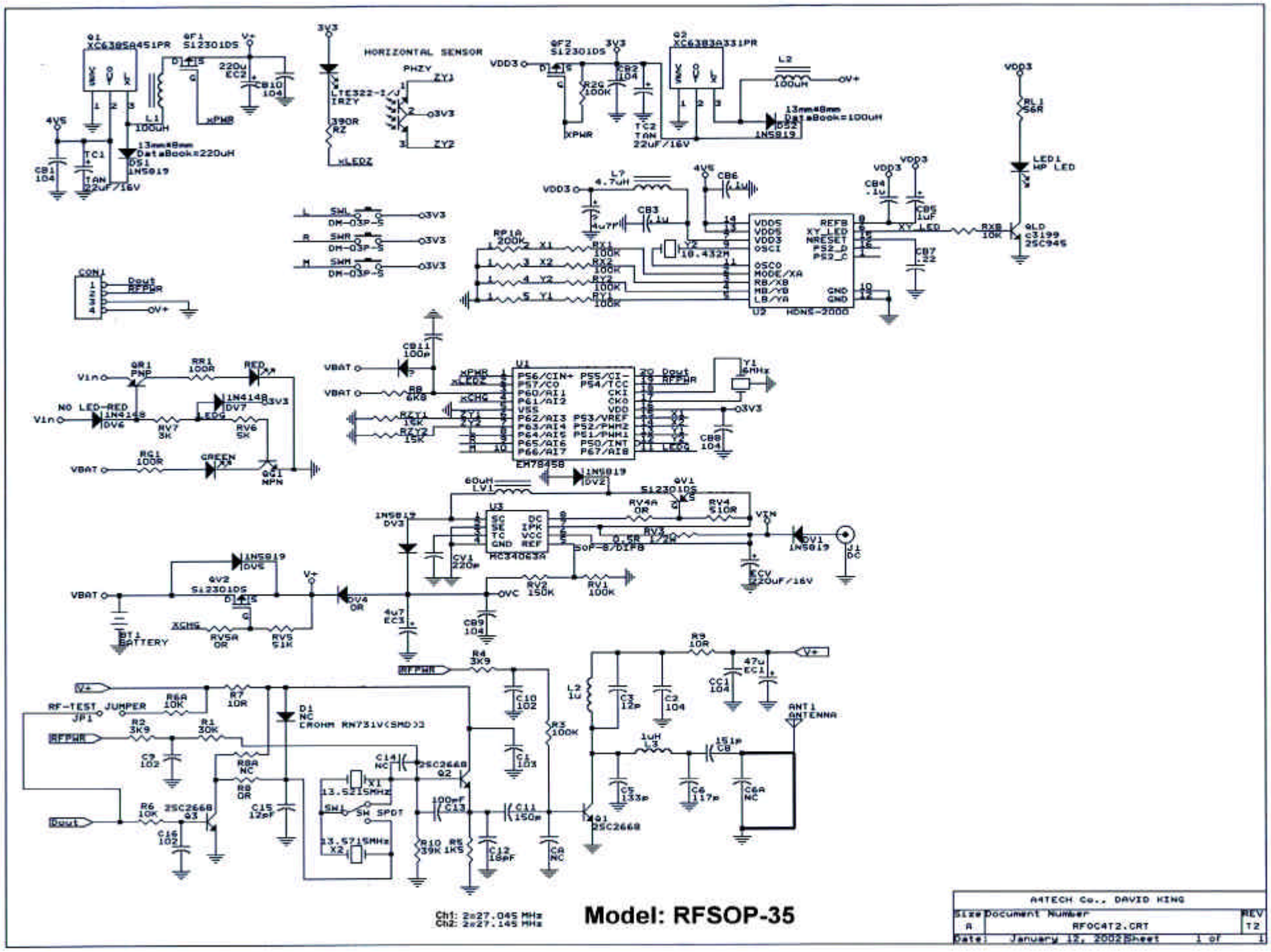
HORIZONTAL SENSOR
Ch1: 2x27.045 MHz
Ch2: 2x27.145 MHz
Model: RFSOP-35
A4TECH Co., DAVID KING
Size A
Document Number
RFOC4T2.CRT
REV T2
Date: January 12, 2002
Sheet 1 of 1