Measurement Report

FCC ID:H8GRFKB21

This report concerns (check one) : ■ **Original Grant** □ **Class II Change**

Issued Date	:	Nov 15, 2002
Project No.	:	02E2694
Equipment	:	RF Keyboard
Model No.	:	RFKB-21;RFKBS-21
Applicant	:	A-FOUR TECH CO., LTD. 6F, No. 108, Min-Chuan Rd., Hsin-Tien, Taipei, Taiwan, R.O.C.

Tested by :
Neutron Engineering Inc. EMC Laboratory
Data of Test :
Nov. 08,2002 ~ Nov 13, 2002

Testing Engineer : Jeff
(Jeff Yang)

Technical Manager : Andy Chiu
(Andy Chiu)

Authorized Signatory : George Yao
(George Yao)

NEUTRON ENGINEERING INC.

No. 132-1, Lane 329, Sec. 2, Palain Rd.,
Shijr Jen, Taipei, Taiwan
TEL：(02) 2646-5426 FAX：(02) 2646-6815

0659
ILAC MRA

Code:200145-0

Declaration

Neutron represents to the client that testing is done in accordance with standard procedures as applicable and that test instruments used has been calibrated with the standards traceable to National Measurement Laboratory (**NML**) of **R.O.C**., or National Institute of Standards and Technology (**NIST**) of **U.S.A.**

Neutron's reports apply only to the specific samples tested under conditions. It is manufacture' s responsibility to ensure that additional production units of this model are manufactured with the identical electrical and mechanical components. **Neutron** shall have no liability for any declarations , inferences or generalizations drawn by the client or others from **Neutron** issued reports.

Neutron' s reports must not be used by the client to claim product endorsement by the authorities or any agency of the Government.

This report is the confidential property of the client. As a mutual protection to the clients, the public and **Neutron-self**, extracts from the test report shall not be reproduced except in full with **Neutron**' s authorized written approval.

Neutron' s laboratory quality assurance procedures are in compliance with the **ISO Guide 17025** requirements, and accredited by the conformity assessment authorities listed in this test report.

Limitation

For the use of the authority's logo is limited unless the Test Standard(s)/Scope(s)/Item(s) mentioned in this test report is (are) included in the conformity assessment authorities acceptance respective.

Assessment Authorities	ISO Guide Adopted	Test Standard/Scope/Item Acceptance
NVLAP	ISO Guide 17025	FCC Part 15 Subpart B/C IEC/CISPR22 AS/NZS 3548 CNS 13438
CNLA	ISO Guide 17025	FCC Part 15 Subpart B/C CISPR 22/EN 55022 AS/NZS 3548 VCCI -Technical Requirement CNS 13438 SS IEC/CISPR 22 IEC/EN 61000-3-2 IEC/EN 61000-4-5 IEC/EN 61000-3-3 IEC/EN 61000-4-6 IEC/EN 61000-4-2 IEC/EN 61000-4-8 IEC/EN 61000-4-3 IEC/EN 61000-4-11 IEC/EN 61000-4-4

Table of Contents **Page**

1 General Information 5
1.1 Applicant 5
1.2 Manufacturer 5
1.3 Equipment Under Tested 5
1.4 OEM Brand/Model 5
1.5 Product Description 5
1.6 Connecting I/O Port(s) 5
1.7 Power Supplied 5
1.8 Products Covered 6
1.9 Model Difference (Series, Versions, if any) 6
1.10 EUT Modifications 6
1.11 Electric Block Diagram 6
1.12 Photos of EUT 6
2 RFI Emissions Measurement 7
2.1 Test Facility 7
2.2 Standard Compliance 7
2.3 Test Conditions and Channel 7
2.4 Test Methodology 7
2.5 Deviations from Standard Test Method 7
2.6 Sample(s) Tested 8
2.7 Measurement Instrument 8
2.8 Measurement Uncertainty 8
2.9 Tested System Set-Up/Configuration Details 8
Table -1 Equipments Used in Tested System 9
Diagram -1 Block diagram showing the configuration of system tested 10
Table - 2 Equipments Used in Tested System 11
Table - 3 Information of Interface Cable 11
2.10 Max.(Worst Case) RF Emission Evaluation 12
2.11 EUT Operation 12
3 Justification 13
3.1 Limitations 13
3.1.1 Power Line Conducted Emission 13
3.1.2 Radiated Emission Limits 13
3.2 Measurement Justification 14
3.2.1 Conducted Emission 14
3.2.2 Radiated Emission 14
3.2.3 Field Strength Calculation 15
3.3 Measurement Data 15
Table 4 Conducted Emission Data 15
Table 5 Radiated Emission Data 15

Table of Contents **Page**

Attachment 19
A. Electric Block Diagram 20
B. EUT Modification Description 21
C. EUT Test Photos 22
D. EUT Photos 24
E. User' s Manual 29
F. Product Labeling 30
G. Bandwidth Requirement 32
H. Laboratory Accreditation Certificate 35

1. General Information

1.1 Applicant

Name A-FOUR TECH CO., LTD.
Address 6F, No. 108, Min-Chuan Rd., Hsin-Tien, Taipei, Taiwan, R.O.C.

1.2 Manufacturer

Name N/A
Address N/A

1.3 Equipment Under Tested

Name: RF Keyboard
Trade Name: A4TECH
Model No.: RFKB-21;RFKBS-21

1.4 OEM Brand/Model (if applicable)

OEM Brand(s)/Model(s) except the basic model in sub-clause 1.3 is(are) the follows:
OEM Brand: N/A
Model No.: N/A

1.5 Product Descriptions(Application/Features/Specification)

The EUT is a RF Keyboard. A major technical descriptions of EUT is described as following:

A .Operation Frequency	27.095 and 27.195MHz
B. Modulation Type	FSK
C. Antenna Designation	Integral
D. Number Of Channel	2
E. Channel Spacing	100 KHz
F. Operation Methodology	The mouse encoder generates a pulse code serially transmit (typical designation) into the modulator(or called as mixer) stage in circuit. This pulse signal mixed with the carrier at modulator(mixer) stage by way of FSK mode frequency modulation. The modulation depth is designed such as ± 5KHz in this application, that means the pulse(may be at high level state or low level state) will trigger the oscillator to generate a frequency at a specified fundamental frequency +5KHz or –5KHz, depended on the designation. For example, if the carrier frequency defined as fundamental frequency +5KHz at high level state, then the alternative carrier frequency will be fundamental frequency –5KHz at low level state. Then the modulator(mixer) will output a modulated signal into RF amplifier stage and finally to the transmit antenna.

Based on the application, features, or specification exhibited in User's Manual, the EUT is considered as an ITE/Computing Device. More details of EUT technical specification, please refer to the User's Manual (Attachment - **E**.)

1.6 Connecting I/O Port(s)

Please refer to the User's Manual (Attachment - **E**.)

1.7 Power Supplied

Power Source: Battery supplied
Power Cord: N/A
Power Rating: DC 3 V

1.8 Products Covered (if applicable)

The sample tested including the following sub-system/module/accessory :

Sub-system/ Module/ Accessory	Model/Type No.	Int. Inst./ Ext. Cont.
N/A	N/A	N/A

1.9 Model Difference (Series, Versions, if any)

Except the basic model no. (model designation of the sample tested in this test report), additional model no. covered is(are) :

Models RFKB-21;RFKBS-21 designed based on similar electrical circuit but different aspect of enclosure.

1.10 EUT Modifications (if applicable)

No any modification required for the EUT to comply with the standards.

1.11 Electric Block Diagram

Please refer to the Attachment – **A.**

1.12 Photos of EUT

Please refer to the Attachment – **D.**

2. RFI Emissions Measurement

2.1Test Facility

The test facilities used to collect the test data in this report located at No.132-1, Lane 329, Sec. 2, Palain Road, Shijr City, Taipei, Taiwan.

2.2 Standard Compliance

The test data contained in this report relate only to the item(s) listed below :

FCC Part15, Subpart C / ANCI C63.4 : 1992

The composite system (including receiver and transmitter) in compliance with Subpart B is authorized under a DOC procedure.

2.3 Test Conditions and Channel

Test Channel (1)	EUT Channel	Test Frequency(MHz)
1	CH 1	27.095
2	CH 2	27.195

Note:

(1)The measurements are performed at the highest and lowest available channels with the modulation enabled.

2.4 Test Methodolog

Only radiated testing was performed during the max. EMI emission evaluation. Conducted testing excepted because of the EUT is a battery operating device and no any other cable connection to PC device.

Test procedures according to the technical standards : (Antenna to EUT distance is 3 m)

FCC Part15 (15.227) , Subpart C				
Section	Test Item	Limit	Frequency Range (MHz)	Result
15.209	Radiated Emission	Class B	30-1000	PASS
15.227	Radiated Emission	10000 μV/m (80dBμV/m) @ 3 m	26.96-27.28	PASS

2.5 Deviations from Standard Test Method

N/A

2.6 Sample(s) Tested

The representative sample tested in this reports is(are): RFKB-21

Test results in this test report relate only to the sample(s) tested.

The EUT has been tested according to the following environmental condition:

Input Power	DC:3V
Temperature	24 ℃
Relative Humidity	58 %

2.7 Measurement Instruments

Valid measurement instruments used in this report refer to **Table-1** enclosed.

2.8 Measurement Uncertainty

Measurement Uncertainty for a Level of Confidence of 95 % , U=2xUc(y)

Radiated Emission Measurement ± 2.47 dB

Conducted Emission Measurement ± 2.29 dB

2.9 Tested System Set-Up/Configuration Details

The system was configured for testing in a typical fashion (as a user would normally use) or in-accordance with the operating configuration specified in the user's manual. A Block Diagram(please refer to the Diagram - 1) and Photos(please refer to the attachment - **C**) showing the set-up/configuration of system tested. In addition, **Table-2** and **Table-3** provide a detail of all equipment items and cables information used in the system tested.

Table -1 Measurement Instruments List

Item	Instruments	Mfr/Brand	Model/Type No.	Serial No.	Calibrated Date	Next Cali. Date	Note
1	LISN	EMCO	3825/2	9605-2539	2002-06-10	2003-06-09	✓
2	LISN	Rolf Heine	NNB-2/16Z	98083	2002-11-04	2003-11-03	✓
3	LISN	Rolf Heine	NNB-2/16Z	98053	2001-11-22	2002-11-21	
4	Pulse Limiter	Electro-Metrics	EM-7600	112644	2001-12-10	2002-12-19	✓
5	50Ω Terminator	N/A	N/A	N/A	2002-05-10	2003-05-09	✓
6	Test Cable	N/A	C01	N/A	2001-12-08	2002-12-07	✓
7	Log-Bicon Antenna	MESS-ELEKTRONIK	VULB 9160	3058	2002-10-23	2003-10-22	✓
8	Log-Bicon Antenna	MESS-ELEKTRONIK	VULB 9160	3060	2002-10-23	2003-10-22	
9	Log-Bicon Antenna	MESS-ELEKTRONIK	VULB 9161	4022	2002-07-25	2003-07-24	✓
10	Test Cable	N/A	10M_OS01	N/A	2001-12-08	2002-12-07	✓
11	Test Cable	N/A	OS01-1/-2	N/A	2001-12-08	2002-12-07	✓
12	Test Cable	N/A	10M_OS02	N/A	2001-12-08	2002-12-07	
13	Test Cable	N/A	OS02-1/-2/-3	N/A	2001-12-08	2002-12-07	
14	RF Switch	Anritsu	MP59B	M65982	2001-12-10	2002-12-09	✓
15	Quasi-Peak Adapter	HP	85650A	2521A00844	2002-10-08	2003-04-07	
16	RF Pre-Selector	HP	85685A	2648A00417	2002-10-08	2003-04-07	
17	Spectrum Analyzer	HP	85680B	2634A03025	2002-10-08	2003-04-07	
18	Spectrum Monitor	HP	85662B	2648A13616	2002-10-08	2003-04-07	
19	Pre-Amplifier	Anritsu	MH648A	M09961	2001-12-10	2002-12-09	✓
20	Spectrum Analyzer	ADVAN TEST	R3261C	81720298	2002-08-14	2003-08-13	✓
21	Test Receiver	R&S	ESH3	860156/018	2002-10-22	2003-10-21	
22	Test Receiver	R&S	ESVP	860687/009	2002-11-4	2003-11-03	
23	Test Receiver	MEB	SMV41	130	2001-12-05	2002-12-04	✓
24	Test Receiver	PMM	PMM 9000	4310J01002	2002-10-06	2003-10-03	
25	Horn Antenna	EMCO	3115	9605-4803	2002-05-20	2003-05-19	
26	Test Receiver	R&S	ESMI	843977/005	2001-11-19	2002-11-18	
27	Pre-Amplifier	R&S	ESMI-Z7	1045.5020.9801 (612.278 041 00)	2002-05-20	2003-05-19	
28	Absorbing Clamp	R&S	MDS-21	841077/011	2002-08-23	2003-08-22	
29	Voltage Probe	R&S	ESH2-Z3	841.800/023	2002-08-28	2003-08-27	
30	Signal Generator	HP	8648A	3426A01034	2002-10-11	2004-10-08	
31	Antenna Mast	Chance Most	CMTB-1.5	N/A	N/A	N/A	✓
32	Turn Table	Chance Most	CMTB-1.5	N/A	N/A	N/A	✓

Remark :
(1)" ✓" indicates the instrument used in Test Report.
(2)" N/A" denotes No Model No. / Serial No. and No Calibration specified.

Diagram - 1
Block diagram showing the configuration of system tested

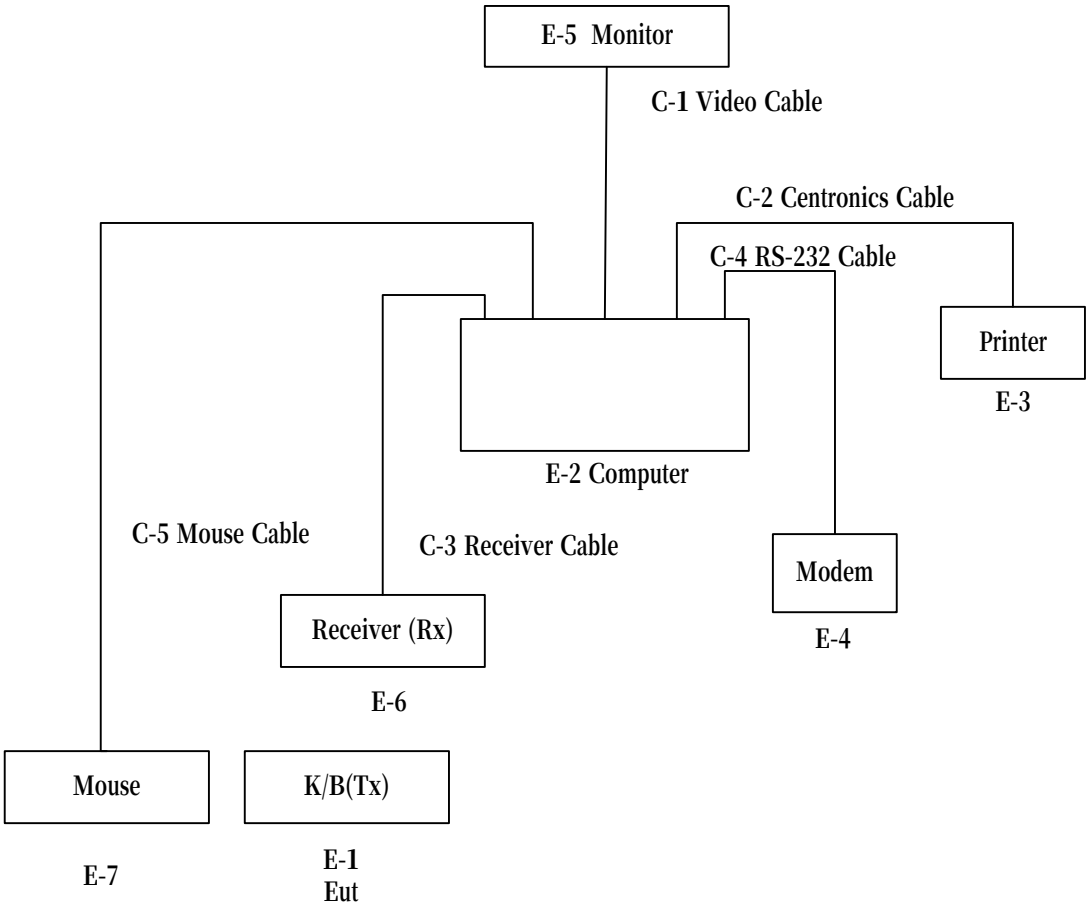

Table - 2 Equipments Used in Tested System

Item	Equipment	Mfr/Brand	Model/Type No.	FCC ID	Series No.	Note
E-1	RF Keyboard	A4TECH	RFKB-21	H8GRFKB21		EUT
E-2	PC	IBM	444	N/A(3)	AAD13M3	
E-3	Printer	SII	DPU-414	N/A(3)	1045105A	
E-4	Modem	ACEEX	DM-1414V	N/A(3)	8041708	
E-5	Monitor	HITACHI	CM753ET	N/A(3)	T8L000003	
E-6	Receiver	A4TECH	RFKBRX5C	N/A(3)	N/A	
E-7	Mouse	HP	M-S34	DZL211029	C3751-60201	

Note:

(1) Unless otherwise denoted as EUT in『Remark』column , device(s) used in tested system is a support equipment.
(2) Unless otherwise marked as ※ in『Remark』column, Neutron consigns the support equipment to the tested system.
(3) The support equipment was authorized by Declaration of Confirmation.

Table - 3 Information of Interface Cable

Item	Shielded Type	Ferrite Core	Length	Note
C-1	Yes	No	1.8m	
C-2	Yes	No	1.8m	
C-3	Yes	No	1.5m	
C-4	Yes	No	1.5m	
C-5	Yes	No	1.5m	

Note:

(1) Unless otherwise marked as ※ in『Remark』column, Neutron consigns the support equipment to the tested system.
(2) For detachable type I/O cable should be specified the length in cm in『Length』column.

2.10 Max.(Worst Case) RF Emission Evaluation

(a) Only radiated testing was performed during the max. EMI emission evaluation. Conducted testing excepted because of the EUT is a battery operating device and no any other cable connection to PC device.

(b) The EUT was configured for testing in a typical fashion (as a customer would normally use it). The EUT has been programmed to continuously transmit during test. This operating condition was tested and used to collect the included data.

2.11 EUT Operation

The EUT exercise program used during radiated and emission measurement was designed to exercise the various system components in a manner similar to a typical use.
The measurements are performed at the highest and lowest available channels with the modulation enabled.

3. Justification

3.1 Limitations

3.1.1 Power Line Conducted Emission

Measurement Frequency Range (MHz)	Mains Terminal Class A Limits (dBuV)		Mains Terminals Class B Limits (dBuV)		Note CISPR FCC Std.
	QP Mode	AV Mode	QP Mode	AV Mode	
0.15 - 0.50	79.00	66.00	66 - 56 *	56 - 46 *	CISPR
0.50 - 5.00	73.00	60.00	56.00	46.00	CISPR
5.00 - 30.0	73.00	60.00	60.00	50.00	CISPR
0.45-1.705	60.00	N/A	48.00	N/A	FCC
1.705-30.0	69.50	N/A	48.00	N/A	FCC

Notes:

(1). The tighter limit applies at the band edges.

(2). The limit of " * " marked band means the limitation decreases linearly with the logarithm of the frequency in the range.

3.1.2 Radiated Emission Limits (Frequency Range 30MHz-1000MHz)

Measurement Frequency Range (MHz)	Quasi-Peak Mode Class A Limits (dBuV/m)		Quasi-Peak Mode Class B Limits (dBuV/m)		Note CISPR FCC Std.
	10m	30m	10m	3m	
30.00 -230.00	40.00	30.00	30.00	40.00	CISPR
230.0 -1000.0	47.00	37.00	37.00	47.00	CISPR
30.00 - 88.00	39.00	N/A	30.00	40.00	FCC
88.00 - 216.0	43.50	N/A	33.50	43.50	FCC
216.0 -960.0	46.00	N/A	36.00	46.00	FCC
above 960.0	49.50	N/A	46.00	54.00	FCC

Notes:

(1). The tighter limit applies at the band edges.

(2). Emission level (dBuV/m)=20log Emission level (uV/m).

(3). A measuring distance 0f 10m is a primary used. However, either 3m or 10m (instead of 10m) distance my be allowed. If the distance is 3m, add 10dB to the QP-limit above. If the distance is 10m, subtract 10dB from the QP-limit above.

3.2 Measurement Justification

3.2.1 Conducted Emission

The EUT is a placed on as table which is 0.8 m above ground plane. According to the requirements in Section 13.1.4.1 of ANSI C63.4-1992. Conducted emissions from the EUT measured in the **frequency range between 0.15 MHz and 30MHz** were made with a **Spectrum Analyzer** using **CISPR Quasi-Peak detector mode**.
The initial step in collecting conducted emission data is a spectrum analyzer peak detector mode pre-scanning the measurement frequency range. Significant peaks are then marked and these signals are then Quasi Peak detector mode and/or Average detector mode re-measured.
Data of **Table - 4**. lists the significant emission frequencies, measured levels, limits and safe margins. All readings are Peak Mode measured unless otherwise stated as QP or AV in column of " Remark ".
If the Peak Mode measured value lower than both QP Mode and AV Mode Limit, EUT shall be deemed to compliance with both QP & AV Limits and then no additional QP Mode or AV Mode measurement performed.

If additional QP or AV Mode measurement needed, and if the QP Mode measured value compliance with the QP Mode Limit and lower than AV Mode Limit, the EUT shall be deemed to meet both QP & AV Limits and then only QP Mode was measured, but AV Mode was not performed。

3.2.2 Radiated Emission

The EUT is a placed on as turn table which is 0.8 m above ground plane. The turn table shall rotate 360 degrees to determine the position of maximum emission level. EUT is set 3m away from the receiving antenna which varied from 1m to 4m to find out the highest emission. And also, each emission was to be maximized by changing the polarization of receiving antenna both horizontal and vertical. In order to find out the max. emission, the relative positions of this hand-held transmitter(EUT) was rotated through three orthogonal axes according to the requirements in Section 13.1.4.1 of ANSI C63.4-1992.
The initial step in collecting conducted emission data is a spectrum analyzer peak detector mode pre-scanning the measurement frequency range. Significant peaks are then marked and then Quasi Peak, Peak or Average detector mode re-measured.

Data of **Table – 5** lists the significant emission frequencies, measured levels, limits and safe margins. All readings are Peak Mode measured unless otherwise stated as QP or AV in column of " Remark ".

If the Peak Mode measured value compliance with and lower than Quasi Peak or Average Mode Limit, the EUT shall be deemed to meet QP/AV Limits and then no additional QP/AV Mode measurement performed.

3.2.3 Field Strength Calculation

The field strength is calculated by adding the Antenna Factor and Cable Factor and subtracting the Amplifier Gain (if any) from the measured reading. The basic equation with a sample calculation is as **FS = RA + AF + CL - AG**

Where FS = Field Strength
RA = Receiver Amplitude
AF = Antenna Factor (1)
CL = Cable Attenuation Factor(Cable Loss) (1)
AG = Amplifier Gain (1)

Remark :

(1) The Correction Factor = AF + CL - AG, as shown in the data tables' Correction Factor column.

3.3 Measurement Data

Table - 4. Conducted Emission Data (015-30MHz) – Not Applicable

Table - 5. Radiated Emission Data (30-1000MHz)

(A) Radiated Emission Test Set-Up, Frequency Below 1000MHz

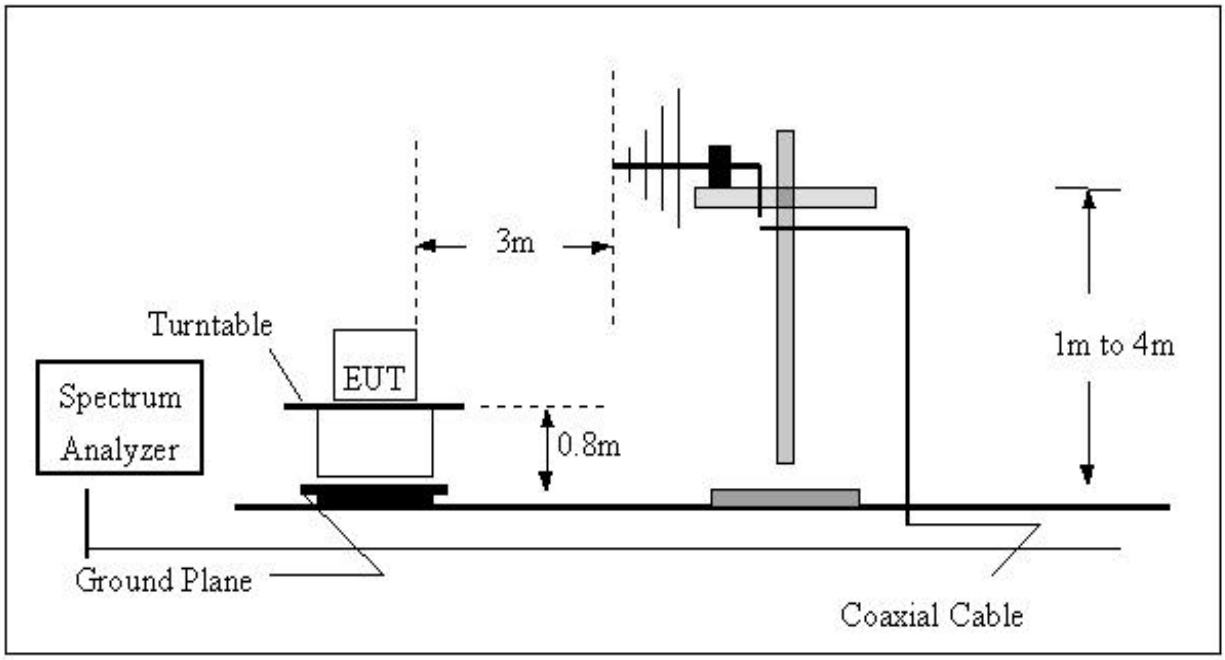

(B) Radiated Emission Test Set-UP Frequency Over 1 GHz

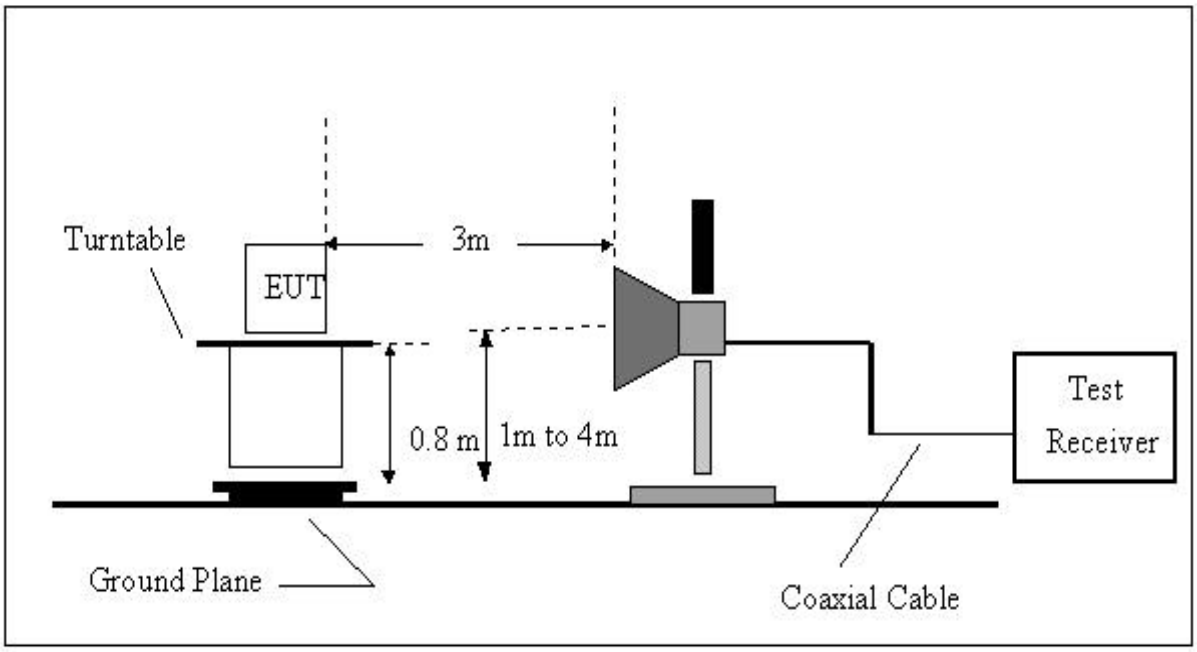

Table 5 Radiated Emission Data (30-1000MHz)

Special Notes：(EUT Operation Mode or Test Configuration Mode, if applicable)
CH1

Freq. (MHz)	Ant.Pol. H/V	DetectorMode (PK/AV)	Reading (dBuV)	Ant./CL/ Amp. CF(dB)	Actual FS (dBuV/m)	Limit3m (dBuV/m)	Safe Margin (dB)	Note
27.094	V	Peak	52.50	-15.50	37.00	80.00	-43.00	F
26.960	V	Peak	37.62	-15.53	22.09	69.50	-47.41	E
27.280	V	Peak	43.12	-15.46	27.66	69.50	-41.84	E
54.184	V	Peak	33.80	-12.96	20.84	40.00	-19.16	H
81.279	V	Peak	33.20	-15.95	17.25	40.00	-22.75	H
108.374	V	Peak	31.60	-13.04	18.56	40.00	-21.44	H
135.469	V	Peak	32.00	-10.58	21.42	43.50	-22.08	H
162.567	V	Peak	33.65	-10.14	23.51	43.50	-19.99	H
27.095	H	Peak	59.17	-15.50	43.67	80.00	-36.33	F
26.950	H	Peak	39.90	-15.53	24.37	69.50	-45.13	E
27.280	H	Peak	42.30	-15.46	26.84	69.50	-42.66	E
54.018	H	Peak	34.80	-13.05	21.75	40.00	-18.25	H
81.272	H	Peak	38.60	-15.95	22.65	40.00	-17.35	H
108.361	H	Peak	34.60	-13.60	21.00	40.00	-19.00	H
135.449	H	Peak	30.00	-10.70	19.30	43.50	-24.20	H
162.544	H	Peak	39.00	-10.14	28.86	43.50	-14.64	H

Remark：

(1) Spectrum Setting : 30MHz – 1000MHz , RBW= 100KHz, VBW=100KHz, Sweep time = 200 ms.
1GHz- 25GHz, RBW= 1MHz, VBW= 1MHz, Sweep time = 200 ms

(2) All readings are Peak unless otherwise stated QP in column of『Note』. Peak denotes that the Peak reading compliance with the QP Limits and then QP Mode measurement didn't perform。

(3) Measuring frequency range from 25MHz to 1000MHz or the 10th harmonic of highest fundamental frequency。"F" denotes fundamental frequency; " H" denotes spurious frequency. "E" denotes band edge frequency.

(4) Radiated emissions measured in frequency range from 30 MHz to 1000 MHz were made with an instrument using Peak detector mode or QP detector mode of the emission 。

(5) Data of measurement within this frequency range shown " - " in the table above means the reading of emissions are attenuated more than 20dB below the permissible limits or the field strength is too small to be measured.

Table 5 Radiated Emission Data (30-1000MHz)

Special Notes：(EUT Operation Mode or Test Configuration Mode, if applicable)
CH2

Freq. (MHz)	Ant.Pol. H/V	DetectorMode (PK/AV)	Reading (dBuV)	Ant./CL/ Amp. CF(dB)	Actual FS (dBuV/m)	Limit3m (dBuV/m)	Safe Margin (dB)	Note
27.194	V	Peak	49.90	-15.48	34.42	80.00	-45.58	F
26.960	V	Peak	39.20	-15.03	24.17	69.50	-45.33	E
27.280	V	Peak	42.80	-14.96	27.84	69.50	-41.66	E
54.383	V	Peak	32.60	-12.96	19.64	40.00	-20.36	H
81.578	V	Peak	33.60	-15.91	17.69	40.00	-22.31	H
108.773	V	Peak	32.90	-13.01	19.89	40.00	-20.11	H
135.968	V	Peak	31.60	-10.55	21.05	43.50	-22.45	H
163.171	V	Peak	35.95	-10.21	25.74	43.50	-17.76	H
27.193	H	Peak	57.82	-15.48	42.34	80.00	-37.66	F
26.960	H	Peak	39.75	-15.03	24.72	69.50	-44.78	E
27.280	H	Peak	42.60	-14.96	27.64	69.50	-41.86	E
54.384	H	Peak	34.40	-12.96	21.44	40.00	-18.56	H
81.584	H	Peak	26.20	-15.91	10.29	40.00	-29.71	H
108.779	H	Peak	32.00	-13.01	18.99	40.00	-21.01	H
135.969	H	Peak	30.00	-10.55	19.45	43.50	-24.05	H
163.167	H	Peak	39.00	-9.89	29.11	43.50	-14.39	H

Remark：

(1) Spectrum Setting : 30MHz – 1000MHz , RBW= 100KHz, VBW=100KHz, Sweep time = 200 ms.
1GHz- 25GHz, RBW= 1MHz, VBW= 1MHz, Sweep time = 200 ms

(2) All readings are Peak unless otherwise stated QP in column of『Note』. Peak denotes that the Peak reading compliance with the QP Limits and then QP Mode measurement didn't perform。

(3) Measuring frequency range from 25MHz to 1000MHz or the 10th harmonic of highest fundamental frequency。"F" denotes fundamental frequency; " H" denotes spurious frequency. "E" denotes band edge frequency.

(4) Radiated emissions measured in frequency range from 30 MHz to 1000 MHz were made with an instrument using Peak detector mode or QP detector mode of the emission 。

(5) Data of measurement within this frequency range shown " - " in the table above means the reading of emissions are attenuated more than 20dB below the permissible limits or the field strength is too small to be measured.

Attachment

Table Contents

A. Electric Block Diagram
B. EUT Modification Description
C. EUT Photos
D. EUT Test Photos
E. User' s Manual
F. Product Labeling
G. Bandwidth Requirement (Plot)
H. Laboratory Accreditation Certificate

Attachment - A.

Electric Block Diagram

Attachment - B.

EUT Modification Description

Attachment - C.

EUT Test Photos

Attachment – D

EUT Photos

Attachment – E

User' s Manual

Attachment - F

Product Labeling

Attachment - G.

Bandwidth Requirement

Attachment - H.

Laboratory Accreditation Certificate