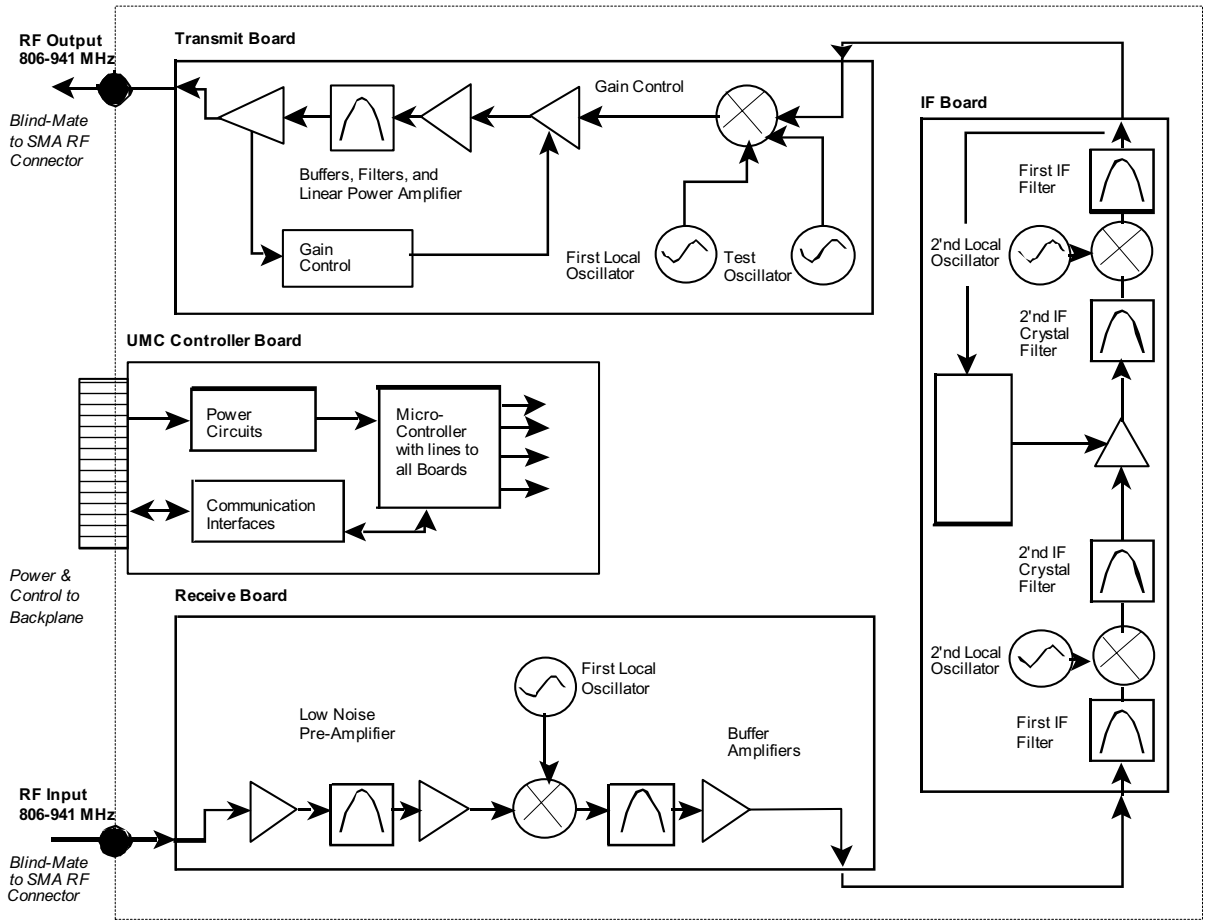Block diagram LNKF800 RF Module