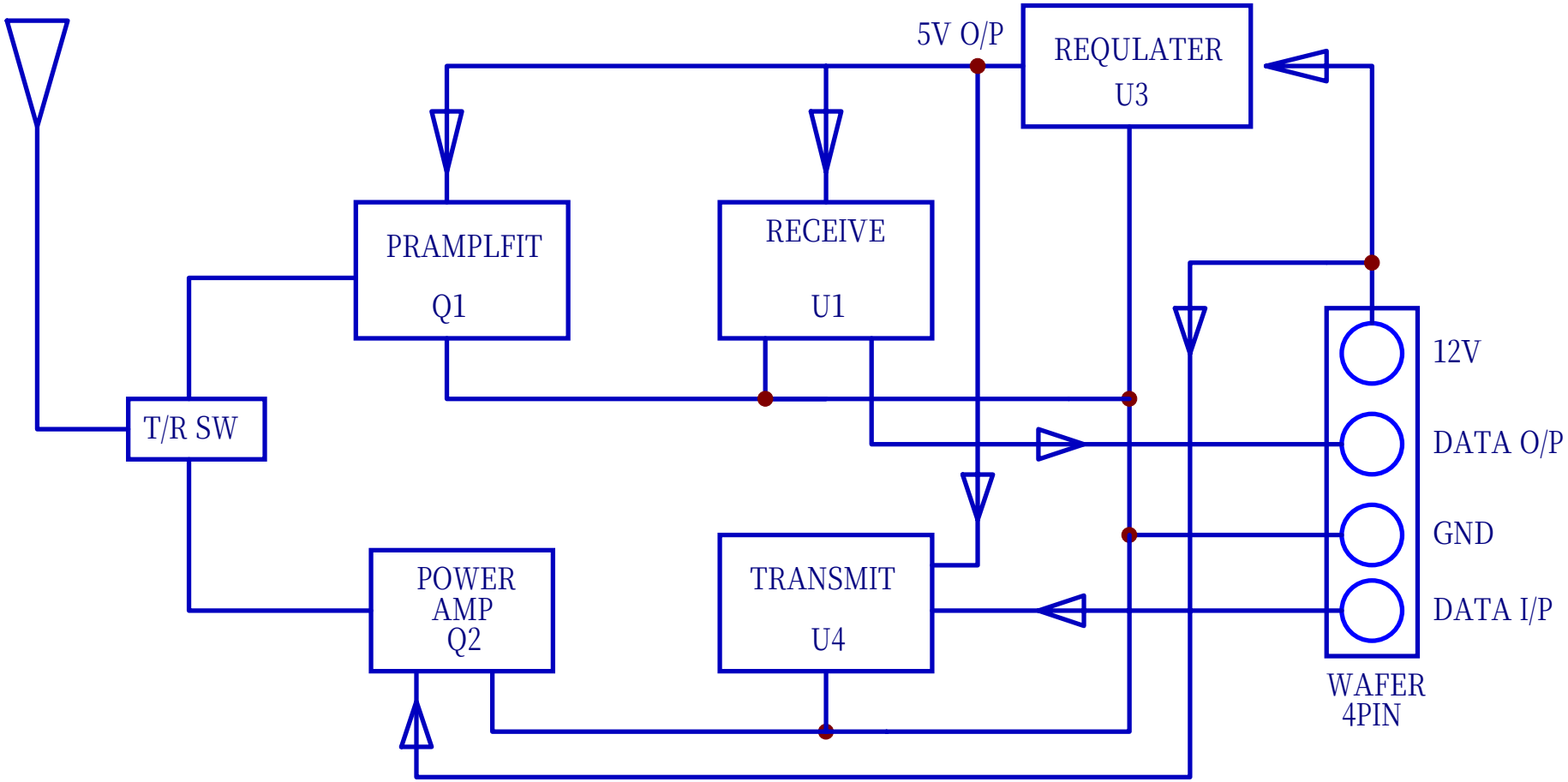

Title	ADVANCE SCURITY INC.	
Size A4	Number TRX-76 BLOCK	Revision 1
Date: 30-May-2003		Sheet of
File: D:\DDB檔案\TRX\TRX-76.ddb		Drawn By: