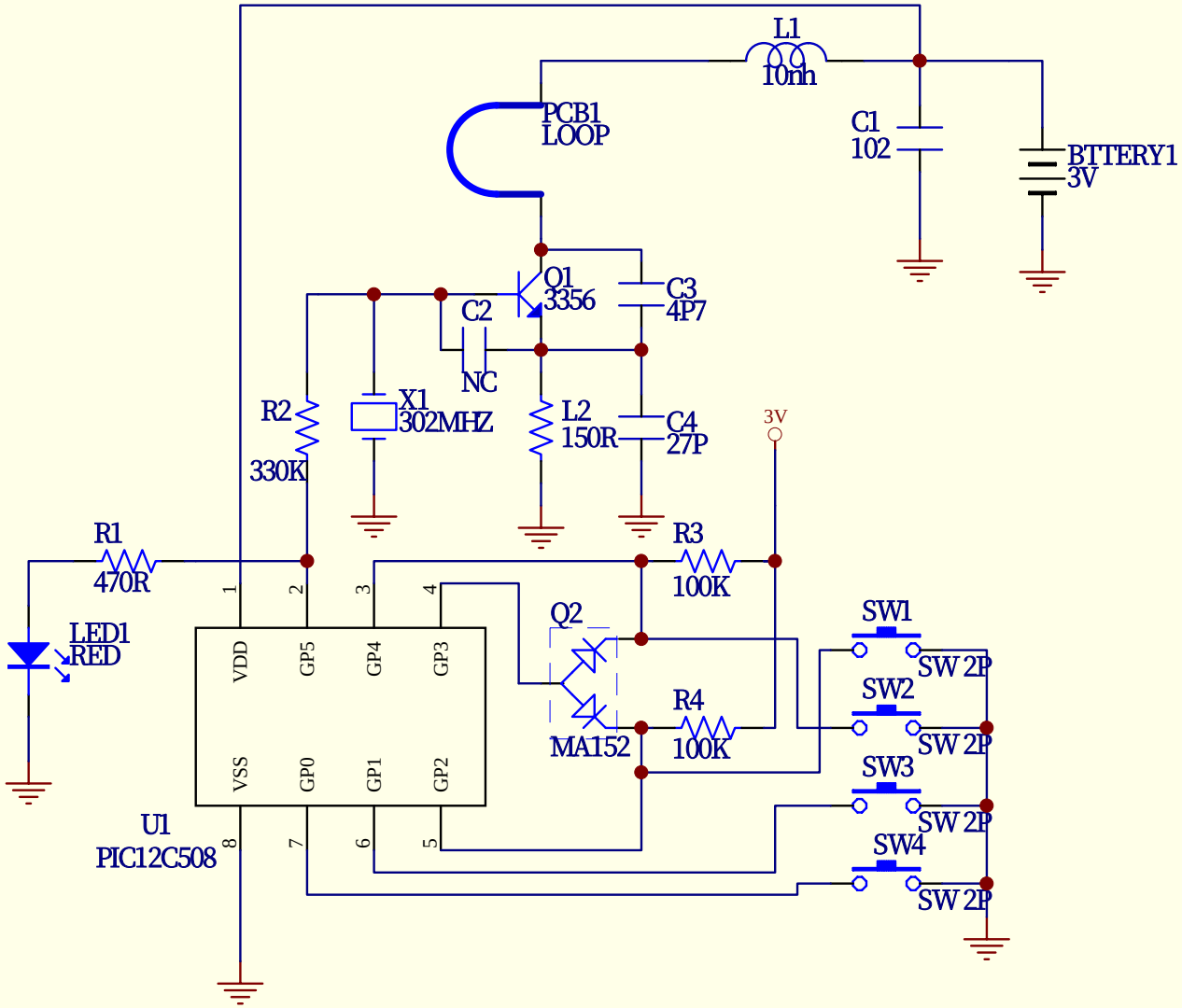


| | | | |
|---|---|---|---|
| Title | ADVANCE SECURITY.INC | | |
| Size A4 | Number SLRF12(302) | | Revision 1 |
| Date: 23-Mar-2005 | | Sheet of | |
| File: C:\DDB\TX\CA-RC6HF.Ddb | | Drawn By: | |