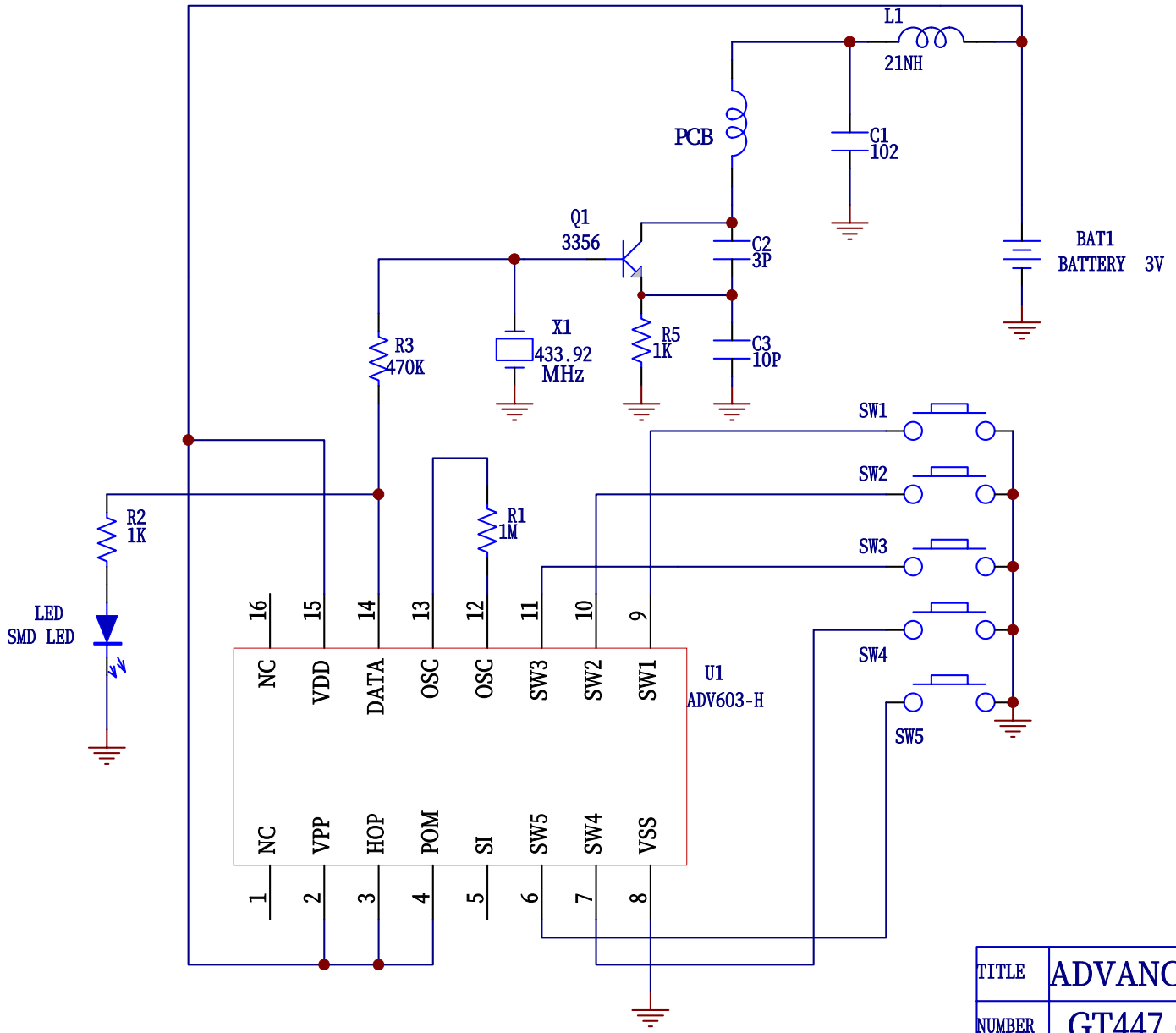

TITLE	ADVANCE SECURITY INC.
NUMBER	GT447 (FCC) REV 1
DATE:	13-OCT-2003