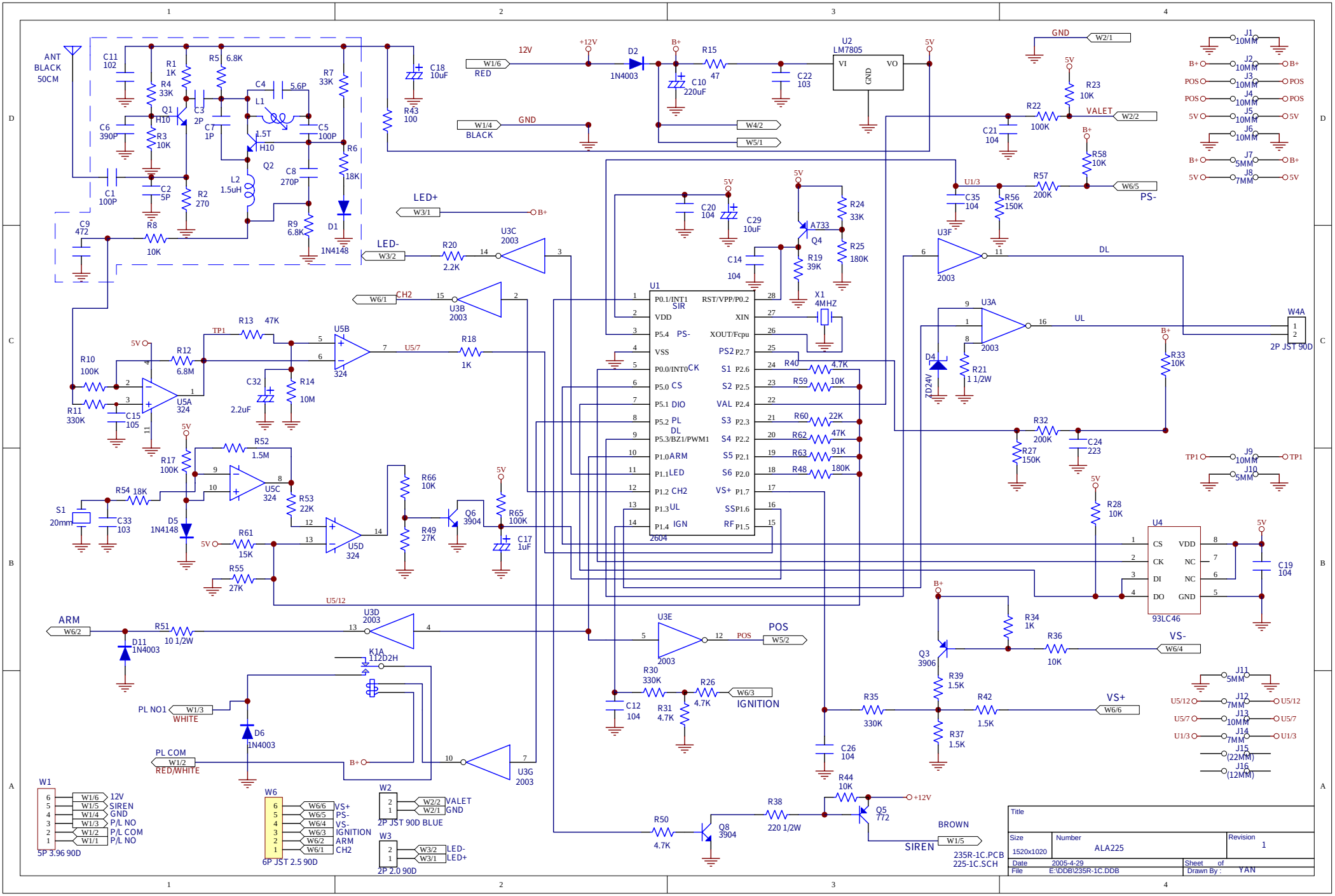
ANT
BLACK
50CM
12V
RED
GND
BLACK
LED+
LED-
CH2
ARM
PL NO1
WHITE
PL COM
RED/WHITE
POS
IGNITION
VS-
VS+
SIREN
BROWN
VALET
PS-
DL
UL
U1
2604
U2
LM7805
U3
2003
U4
93LC46
W1
5P 3.96 90D
W6
6P JST 2.5 90D
W2
2P JST 90D BLUE
W3
2P 2.0 90D
W4A
2P JST 90D
235R-1C.PCB
225-1C.SCH
Title
Size
1520x1020
Number
ALA225
Revision
1
Date
2005-4-29
Sheet of
File
E:\DDB\235R-1C.DDB
Drawn By :
YAN