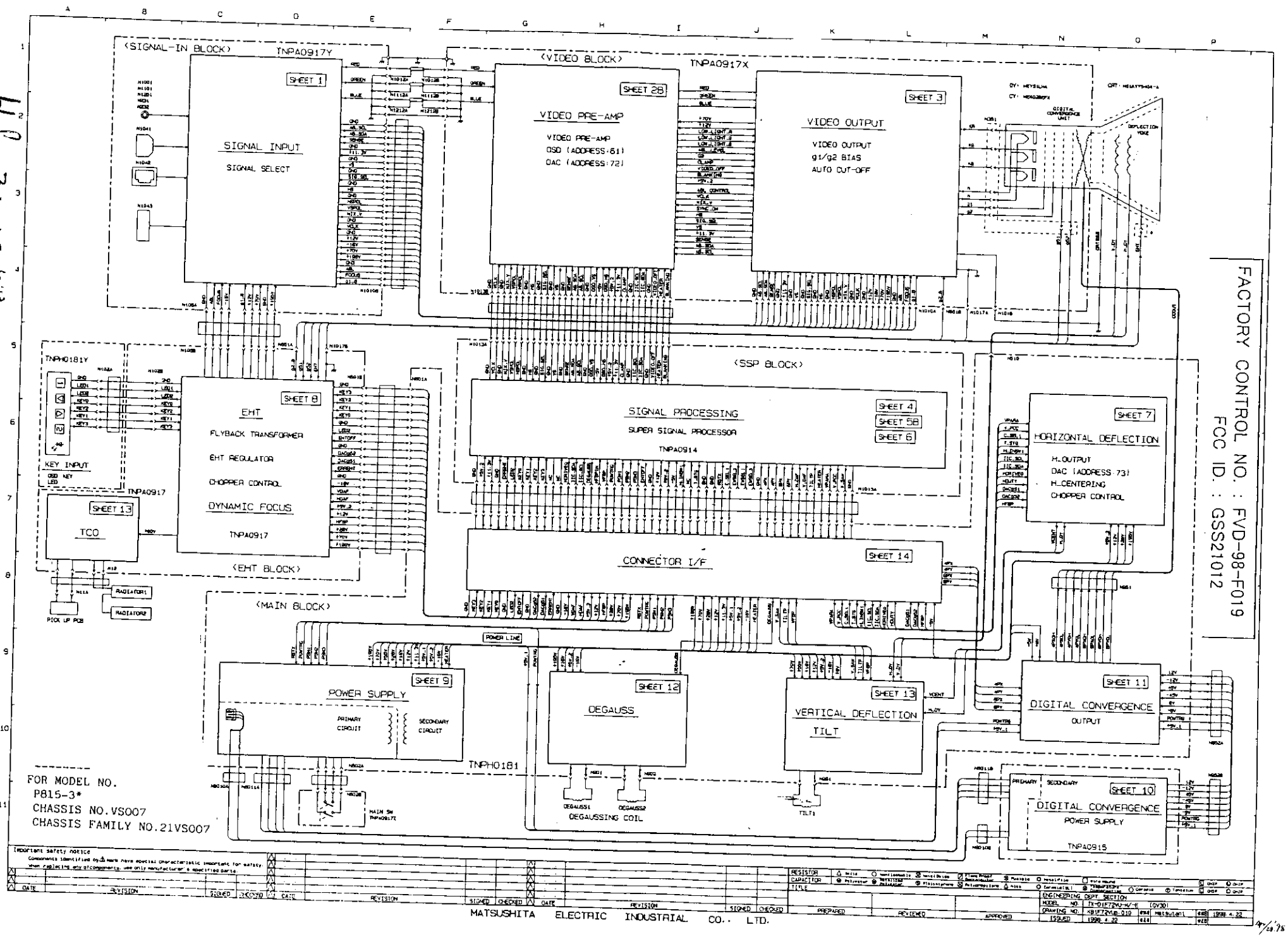
FACTORY CONTROL NO. : FVD-98-F019
FCC ID. : GSS21012
(SIGNAL-IN BLOCK)
TNPA0917Y
SHEET 1
SIGNAL INPUT
SIGNAL SELECT
(VIDEO BLOCK)
TNPA0917X
SHEET 28
VIDEO PRE-AMP
VIDEO PRE-AMP
OSD (ADDRESS:61)
DAC (ADDRESS:72)
SHEET 3
VIDEO OUTPUT
VIDEO OUTPUT
g1/g2 BIAS
AUTO CUT-OFF
DIGITAL CONVERGENCE UNIT
DEFLECTION YOKE
TNPH0181Y
KEY INPUT
OSD KEY
SHEET 8
EHT
FLYBACK TRANSFORMER
EHT REGULATOR
CHOPPER CONTROL
DYNAMIC FOCUS
TNPA0917
TNPA0917
SHEET 13
TCO
(EHT BLOCK)
RADIATOR1
RADIATOR2
PICK UP PCB
(SSP BLOCK)
SHEET 4
SHEET 5B
SHEET 6
SIGNAL PROCESSING
SUPER SIGNAL PROCESSOR
TNPA0914
SHEET 7
HORIZONTAL DEFLECTION
H_OUTPUT
DAC (ADDRESS:73)
H_CENTERING
CHOPPER CONTROL
SHEET 14
CONNECTOR I/F
(MAIN BLOCK)
POWER LINE
SHEET 9
POWER SUPPLY
PRIMARY CIRCUIT
SECONDARY CIRCUIT
TNPH0181
MAIN SW TNPA0917E
SHEET 12
DEGAUSS
DEGAUSS1
DEGAUSS2
DEGAUSSING COIL
SHEET 13
VERTICAL DEFLECTION
TILT
TILT1
SHEET 11
DIGITAL CONVERGENCE
OUTPUT
SHEET 10
DIGITAL CONVERGENCE
POWER SUPPLY
TNPA0915
PRIMARY
SECONDARY
FOR MODEL NO.
P815-3*
CHASSIS NO.VS007
CHASSIS FAMILY NO.21VS007
Important safety notice
Components identified by ⚠ mark have special characteristic important for safety.
When replacing any of components, use only manufacturer's specified parts.
RESISTOR
CAPACITOR
TITLE
DATE
REVISION
SIGNED
CHECKED
PREPARED
REVIEWED
APPROVED
ENGINEERING DEPT. SECTION
MODEL NO. TX-01F72VU-H/-E (GV30)
DRAWING NO. XB1FT2VUB-010
ISSUED 1998.4.22
MATSUSHITA ELECTRIC INDUSTRIAL CO., LTD.

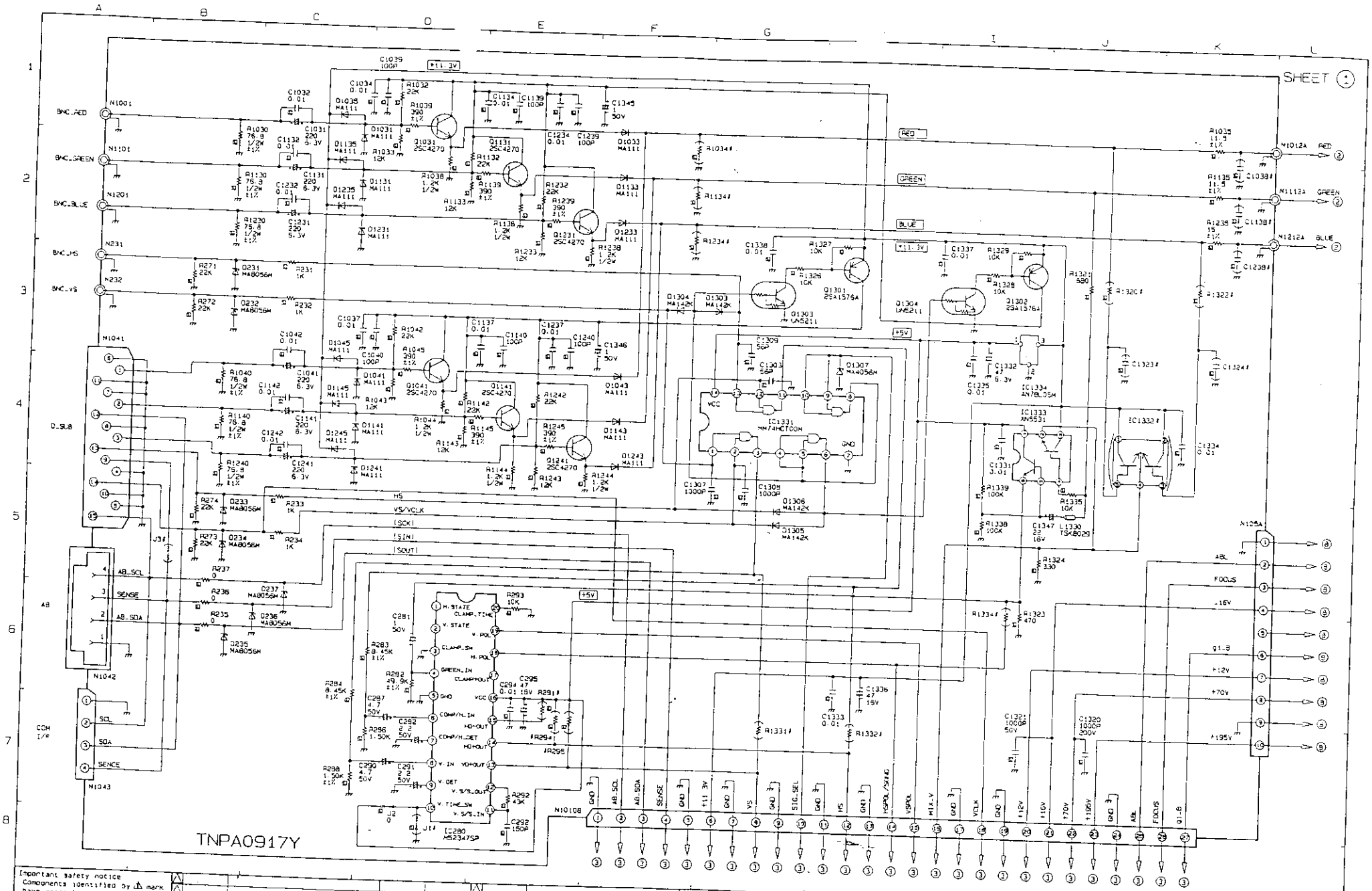

Important safety notice
Components identified by ⚠ mark have special characteristic important for safety.
When replacing any of components, use only manufacturer's specified parts.

SYM	DATE	REVISION	SIGNED	CHECKED	SYM	DATE	REVISION	SIGNED	CHECKED

RESISTOR: △ Solid ○ Nonflammable ⊗ Metal Oxide ⊘ Flame Proof Metal Film ⊗ Fusible ○ Metal Film □ Wire Wound
CAPACITOR: ⊕ Polyester ⊕ Metallized Polyester ⊕ Polystyrene ⊗ Polypropylene ○ Ceramic(S.L) ⊗ Temperature Compensation ○ Ceramic ⊕ Tantalum ⊘ CHIP
TITLE

PREPARED	T. Shimura	REVIEWED	T. Kinoshita
APPROVED			

ENGINEERING DEPT. SECTION

MODEL NO.	TX-01F72HM	(GV30)	
DRAWING NO.	K01F72HM.010	作成 Kouga	1997.2.21
ISSUED	1997.2.21	承認 Matsuoka	1997.8.29

MATSUSHITA ELECTRIC INDUSTRIAL CO., LTD.

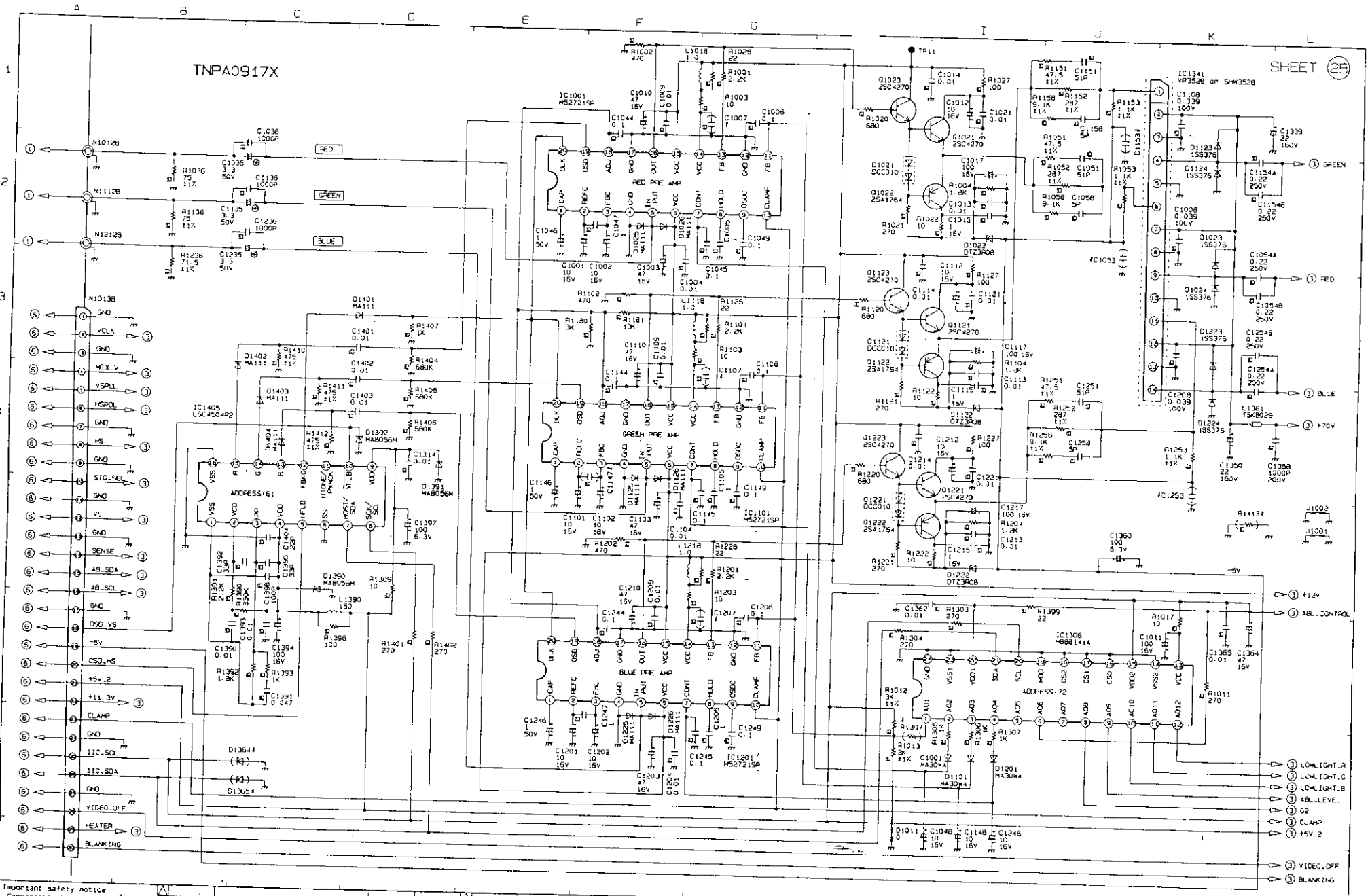

Important safety notice
Components identified by ⚠ mark have special characteristic important for safety.
When replacing any of components, use only manufacturer's specified parts.

SYM	DATE	REVISION	SIGNED	CHECKED	SYM	DATE	REVISION	SIGNED	CHECKED

RESISTOR: △ Solid ○ Nonflammable ⊠ Metal Oxide ☑ Flame Proof Metal Film ⊘ Fusible ○ Metal Film ☐ Wire Wound ☐ CHIP
CAPACITOR: ⊕ Polyester ⊕ Metalized Polyester ⊘ Polystyrene ⊠ Polypropylene ○ Ceramic ⊠ Temperature Compensation ○ Ceramic ⊕ Tantalum ☐ CHIP
TITLE

PREPARED	REVISED	APPROVED	ENGINEERING DEPT. SECTION		
H. Kori	T. Shimura	T. Kinoshita	MODEL NO. TX-01(F72VU-H/-E) (GV30)		
			DRAWING NO. KB1F72VU-020	#A8 Matsutani	#A8 1998. 4. 22
			ISSUED 1998. 4. 22	#2#	#A3

MATSUSHITA ELECTRIC INDUSTRIAL CO., LTD.

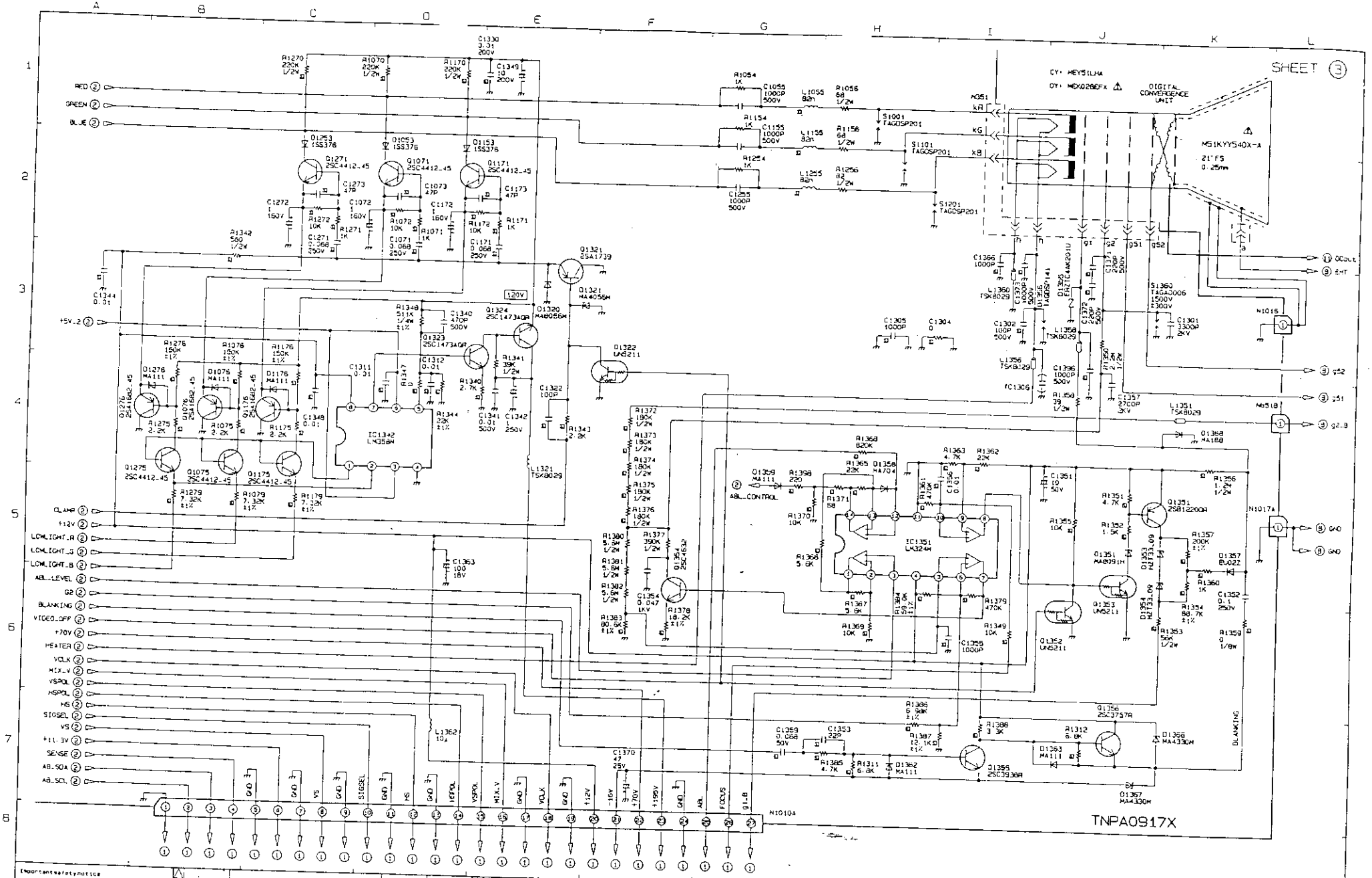
SHEET 3
DIGITAL CONVERGENCE UNIT
M51KYY540X-A
21"FS
0.25mm
TNPA0917X
RED
GREEN
BLUE
+5V_2
QL4HP
+12V
LOWLIGHT_R
LOWLIGHT_G
LOWLIGHT_B
ABL_LEVEL
G2
BLANKING
VIDEO_OFF
+70V
HEATER
VCLK
MIX_V
VSPOL
HSPOL
HS
SIOSEL
VS
+11.3V
SENSE
AB_SDA
AB_SCL
ABL_CONTROL
IC1342 LM358
IC1351 LM324M
N1010A
N1016
N1017A
N1018
BLANKING
GND
ABL
FOCUS
91-B
Important safety notice
Components identified by ⚠ mark have special characteristics important for safety.
When replacing any of components, use only manufacturer's specified parts.
SYM
DATE
REVISION
SIGNED
CHECKED
RESISTOR
CAPACITOR
TITLE
PREPARED
T.Shimura
REVIEWED
T.Kinoshita
APPROVED
ENGINEERING DEPT. SECTION
MODEL NO. TX-01F72-HC
DRAWING NO. KB1F72HC 030
ISSUED 1998.1.13
1998.1.13
Matsutani
MATSUSHITA ELECTRIC INDUSTRIAL CO., LTD.

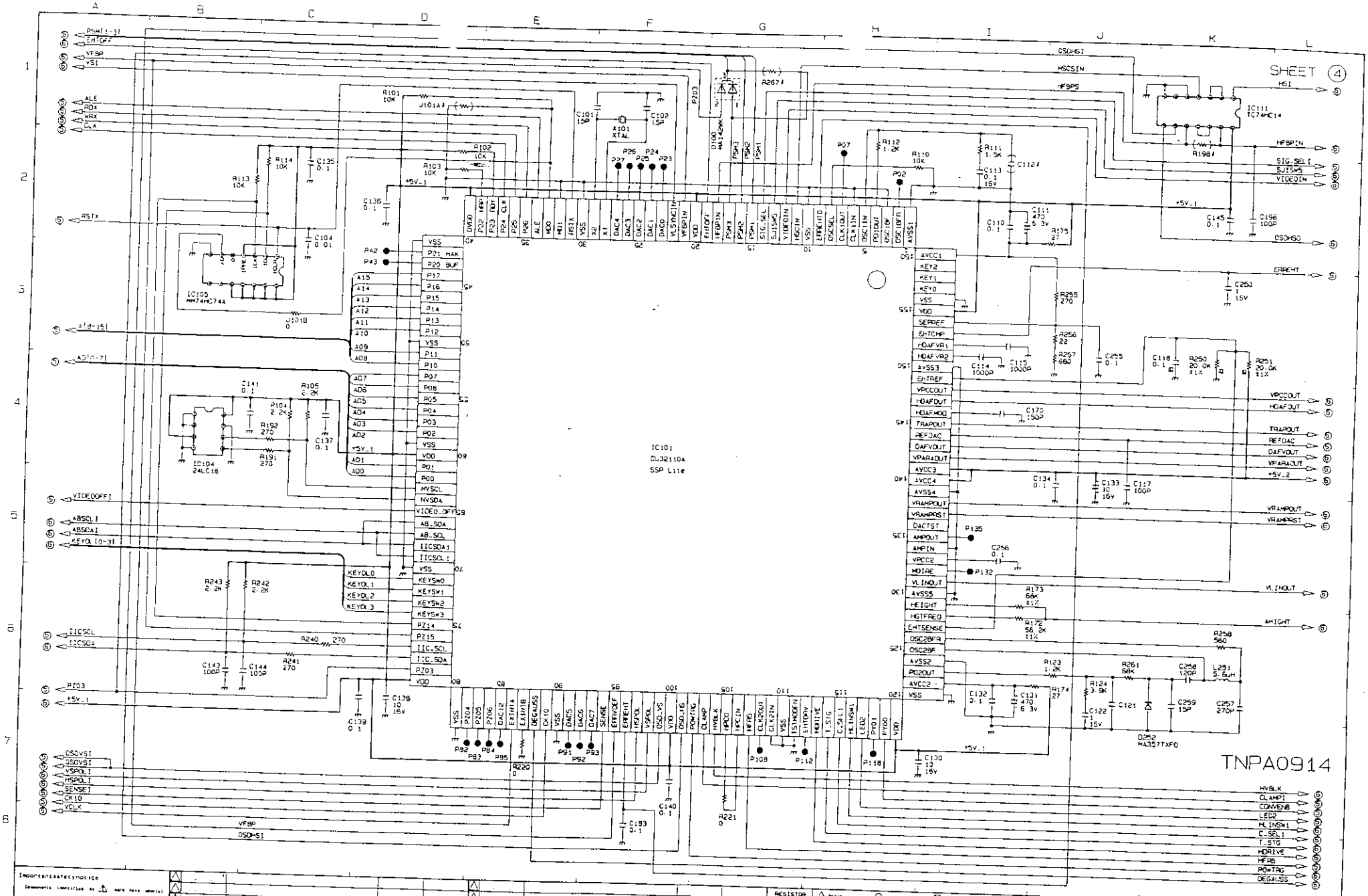
SHEET 4
IC101
CU32110A
SSP Lite
IC105
MM74HC244
IC104
24LC16
IC111
TC74HC14
TNPA0914
SSP MICON
T.Shimura
T.Kinoshita
TX-01F72NM
KB1F72NM.040
1997.2.21
MATSUSHITA ELECTRIC INDUSTRIAL CO., LTD.

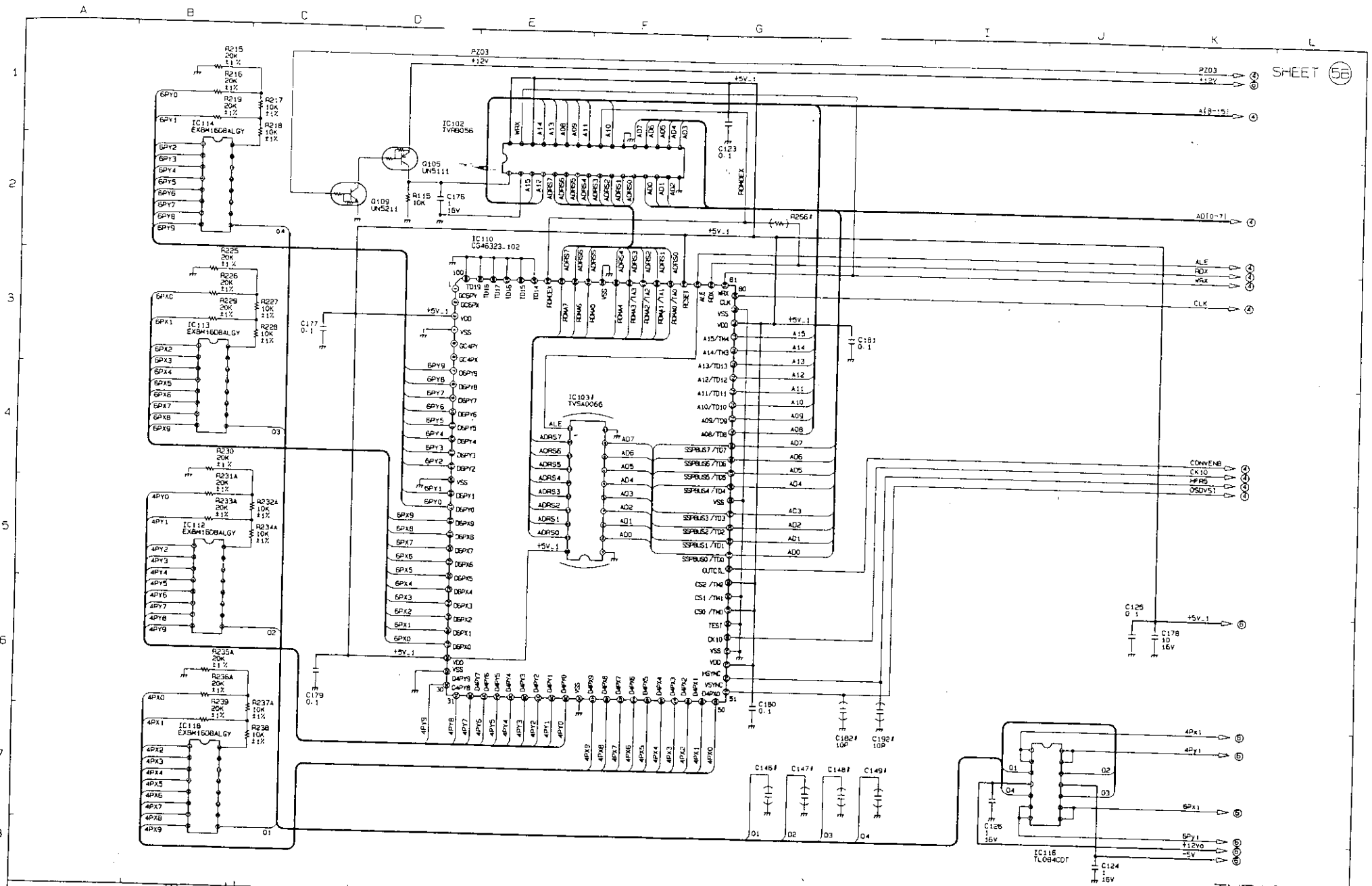
SHEET 58
IC110
CG46323-102
IC102
TVP8056
IC103
TVSA0066
IC114
EXBM16D8ALGY
IC113
EXBM16D8ALGY
IC112
EXBM16D8ALGY
IC116
EXBM16D8ALGY
IC116
TL084CDT
Q105
UN5111
Q109
UN5211
PZ03
+12V
+5V_1
A(8-15)
AD(0-7)
ALE
RDX
WRX
CLK
CONVENB
CK10
HFR5
VSDV51
4Px1
4Py1
6Px1
6Py1
+12V0
+5V
TNPA0914
MATSUSHITA ELECTRIC INDUSTRIAL CO., LTD.
DCON BLOCK
H. Kori
T. Shimura
T. Kinoshita
TX-D1F72VU-H/-E
KB1F72VU-050
1998. 4. 22
Matsutani

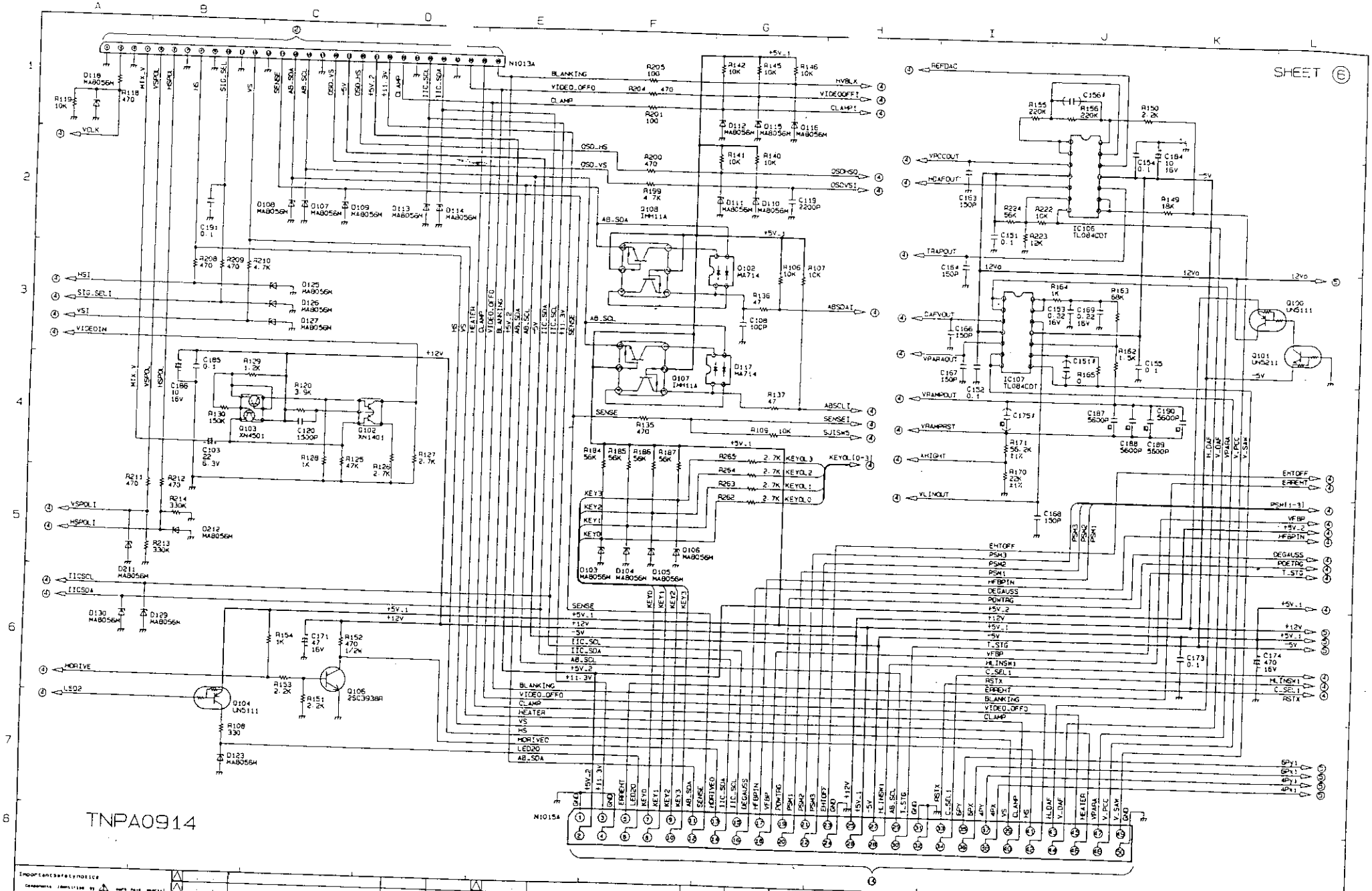
SHEET 6
TNPA0914
N1013A
N1015A
IC106 TL084CDT
IC107 TL084CDT
Q102 MA714
Q107 IMH11A
Q103 XN4501
Q102 XN1401
Q104 UN5111
Q106 2SC3938A
Q120 UN5111
Q101 UN5211
BLANKING
VIDEO_OFFO
CLAMP
OSD_HS
OSD_VS
AB_SDA
AB_SCL
ABSDAI
ABSCLI
SENSE
SJISW5
KEYOL(0-3)
KEYOL3
KEYOL2
KEYOL1
KEYOL0
HVBLK
VIDEOOFFI
CLAMPI
OSDHSO
OSDVSI
REFDAC
VPCCOUT
HCAFOUT
TRAPOUT
CAFVOUT
VPARAOUT
VRAMPOUT
VRAMPRST
AMIGHT
VLINOUT
EHTOFF
EARRENT
PSW1(-3)
VFBP
HFBPIN
DEGAUSS
POWTRG
T_STG
HLINSW1
C_SEL1
RSTX
HORIVE
LED2
VSPOLI
HSPOLI
IICSCL
IICSDA
VOLK
HSI
SIG.SELI
VSI
VIDEOIN
+12V
+5V_1
+5V_2
-5V
+11.3V
12Vo
-5V
6PY1
6PX1
4PY1
4PX1
IMPORTANCE&SAFETY NOTICE
REVISION
DATE
SIGNED
CHECKED
RESISTOR
CAPACITOR
TITLE
IO/ANALOG
PREPARED
T.Shimura
REVIEWED
T.Kinoshita
APPROVED
ENGINEERING DEPT. SECTION
MODEL NO. TX-01F72NM (GV30)
DRAWING NO. KB1F72NM.060
ISSUED 1997.2.21
Kouga 1997.2.21
Matsushimi 1997.7.11
MATSUSHITA ELECTRIC INDUSTRIAL CO., LTD.

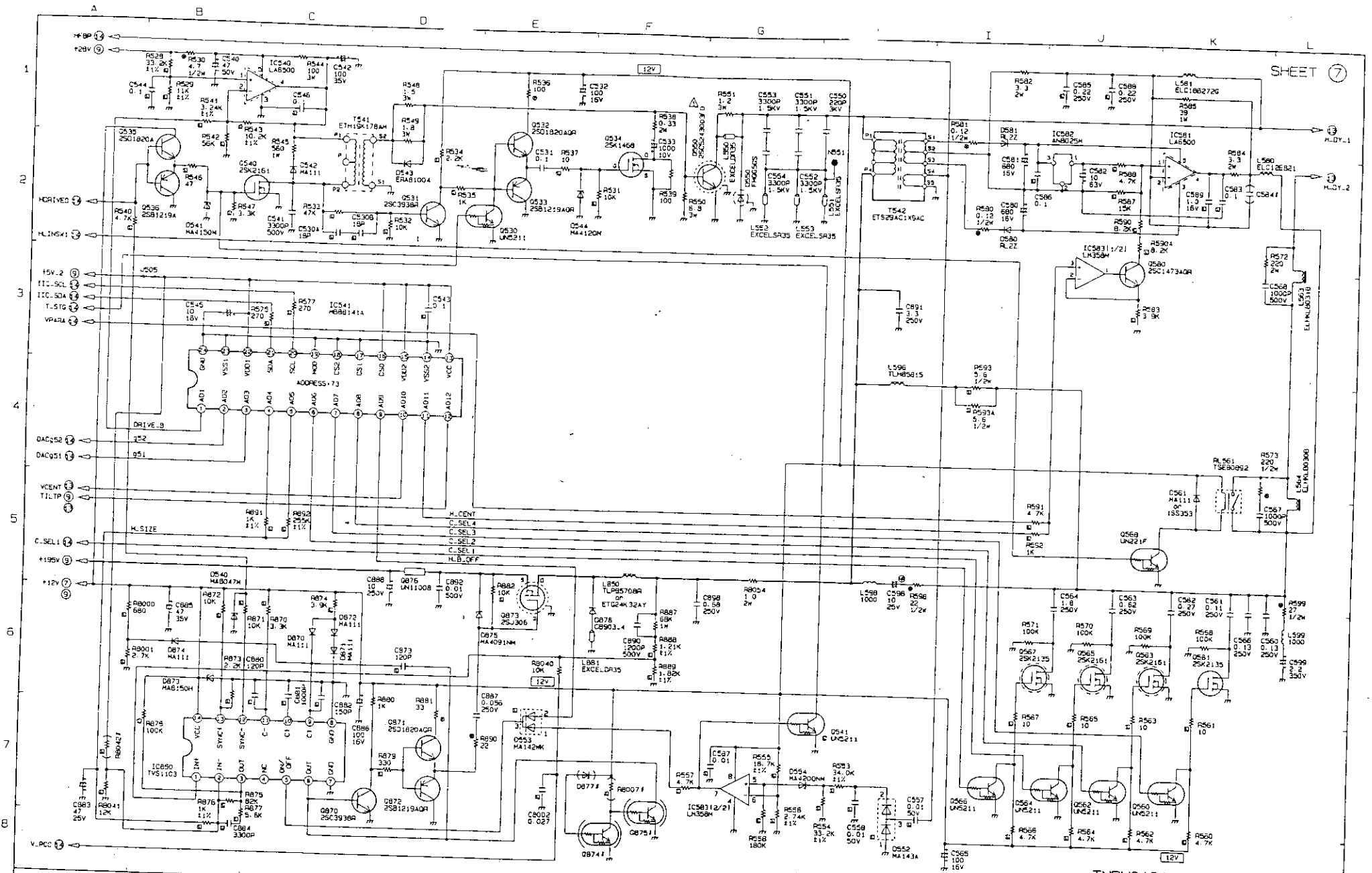

SYM	DATE	REVISION	SIGNED	CHECKED	SYM	DATE	REVISION	SIGNED	CHECKED	PREPARED	REVIEWED	APPROVED	ENGINEERING DEPT. SECTION						
	98. 4. 13	D550 2SC5243→2SC5243003FO	H. Yamazaki							T. Shimura	T. Kinoshita		MODEL NO.	TX-D1F72NM	(GV30)				
													DRAWING NO.	KB1F72NM.070		DRAWN	Kouga	DATE	1997. 2. 21
													ISSUED	1997. 2. 21		DZN	Matsutani	DATE	1998. 4. 15

MATSUSHITA ELECTRIC INDUSTRIAL CO., LTD.

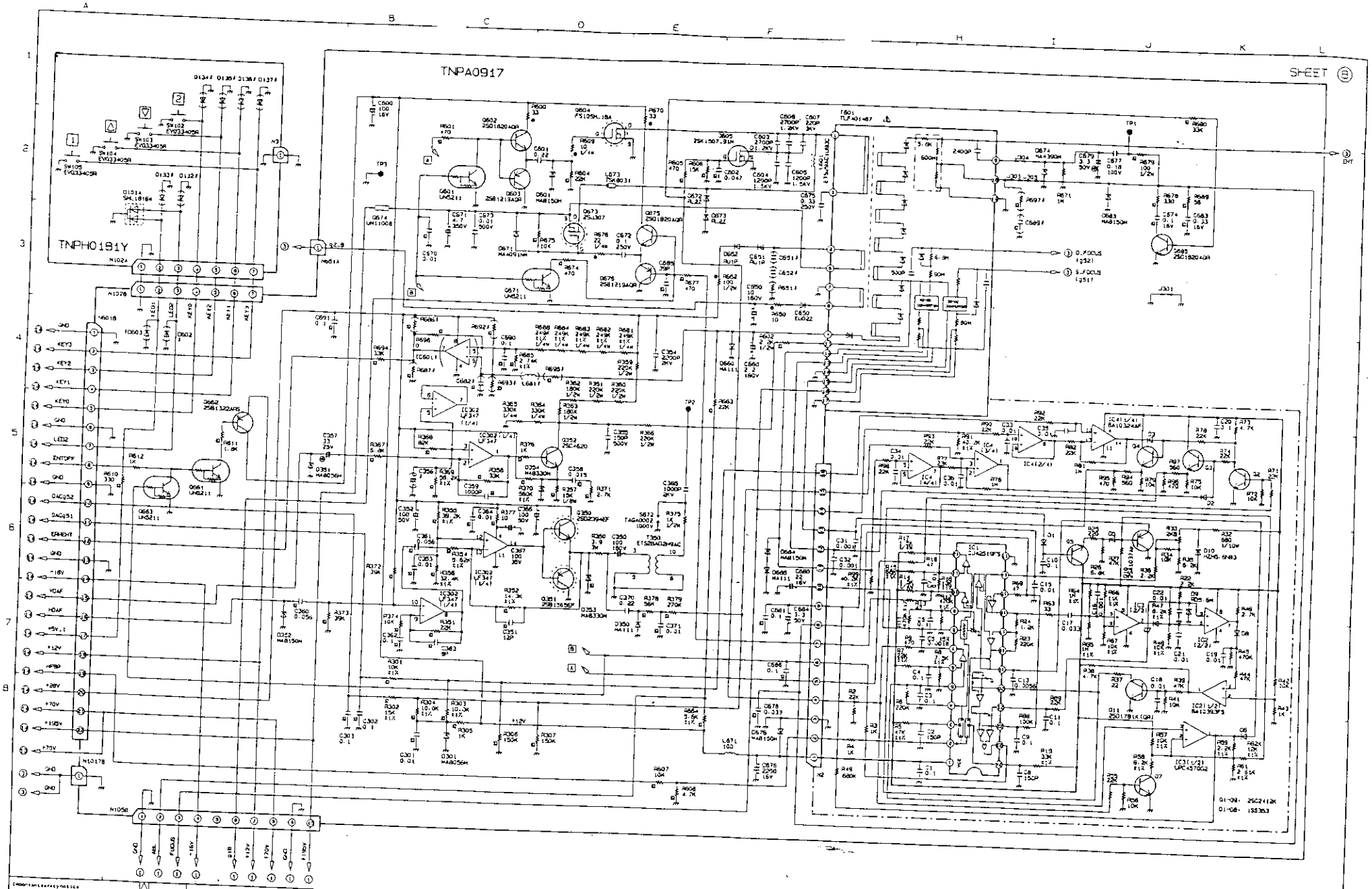
TNPA0917
SHEET 8
TNPH0181Y
IC1 LA4251FS
IC41 BA10324AF
IC31 UPC4570G2
IC21 BA10393FS
Q1-09: 2SC2412K
D1-08: 1SS353
T. Shimura
T. Kinoshita
MATSUSHITA ELECTRIC INDUSTRIAL CO., LTD.

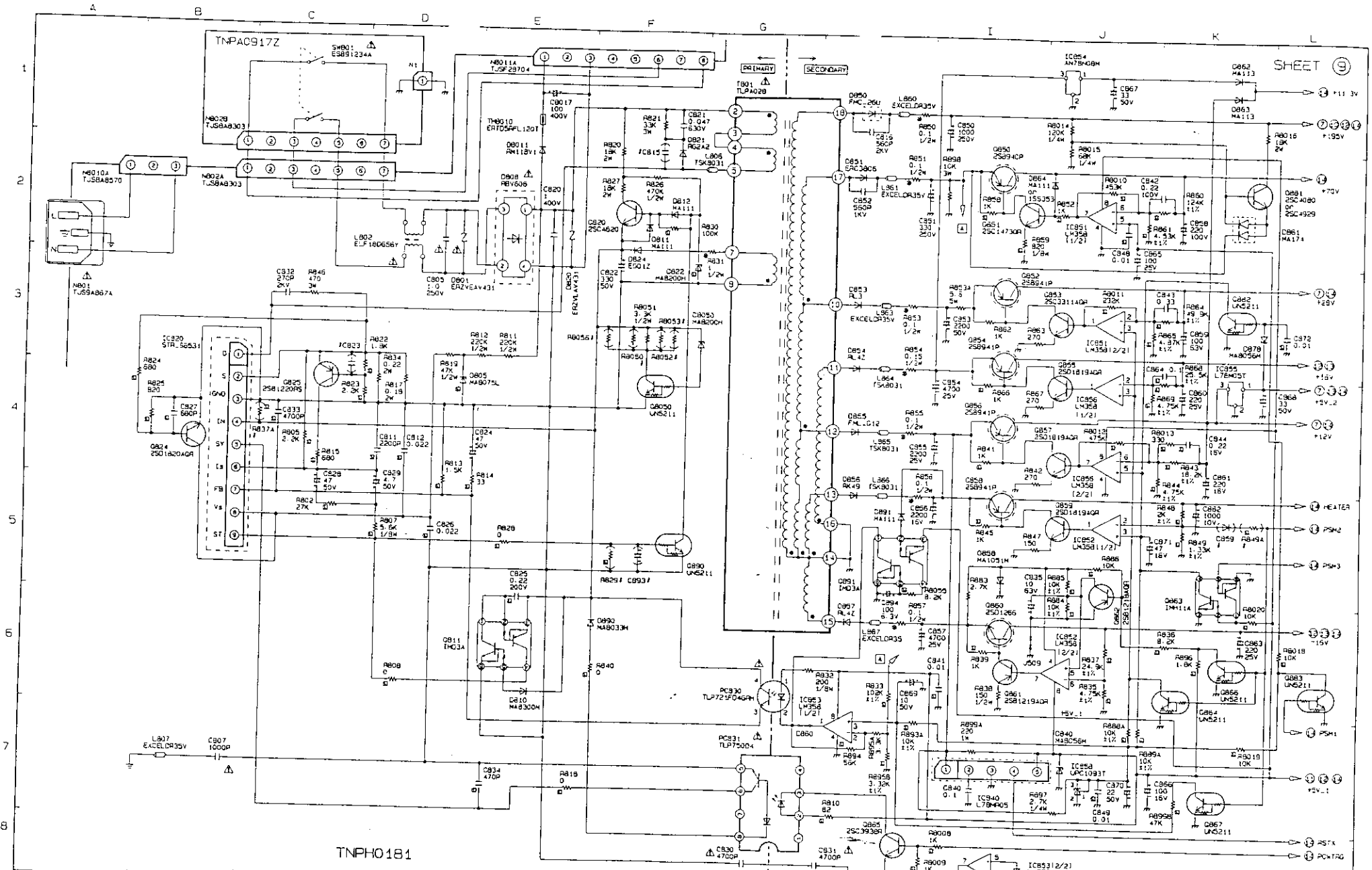

Important safety notice

Components identified by ⚠ mark have special characteristics important for safety. When replacing any of components, use only manufacturer's specified parts.

SYM	DATE	REVISION	SIGNED	CHECKED	SYM	DATE	REVISION	SIGNED	CHECKED

RESISTOR: Wire; Metal film; Fusible; Metal film; Fuse resistor; Chip
CAPACITOR: Polyester; Metallized film; Electrolytic; Ceramic (B); Temperature compensation; Ceramic; Tantalum; Chip
TITLE

PREPARED	T. Shimura	REVIEWED	T. Kinoshita
APPROVED			

ENGINEERING DEPT. SECTION

MODEL NO.	TX-01F72-M	(GV30)	
OPERATING NO.	K91F72NM-090		
ISSUED	1997.2.21	#64 Kouga	#448 1997.2.21
		#Ef MATSUCOM	#143 1997.7.11

MATSUSHITA ELECTRIC INDUSTRIAL CO., LTD.

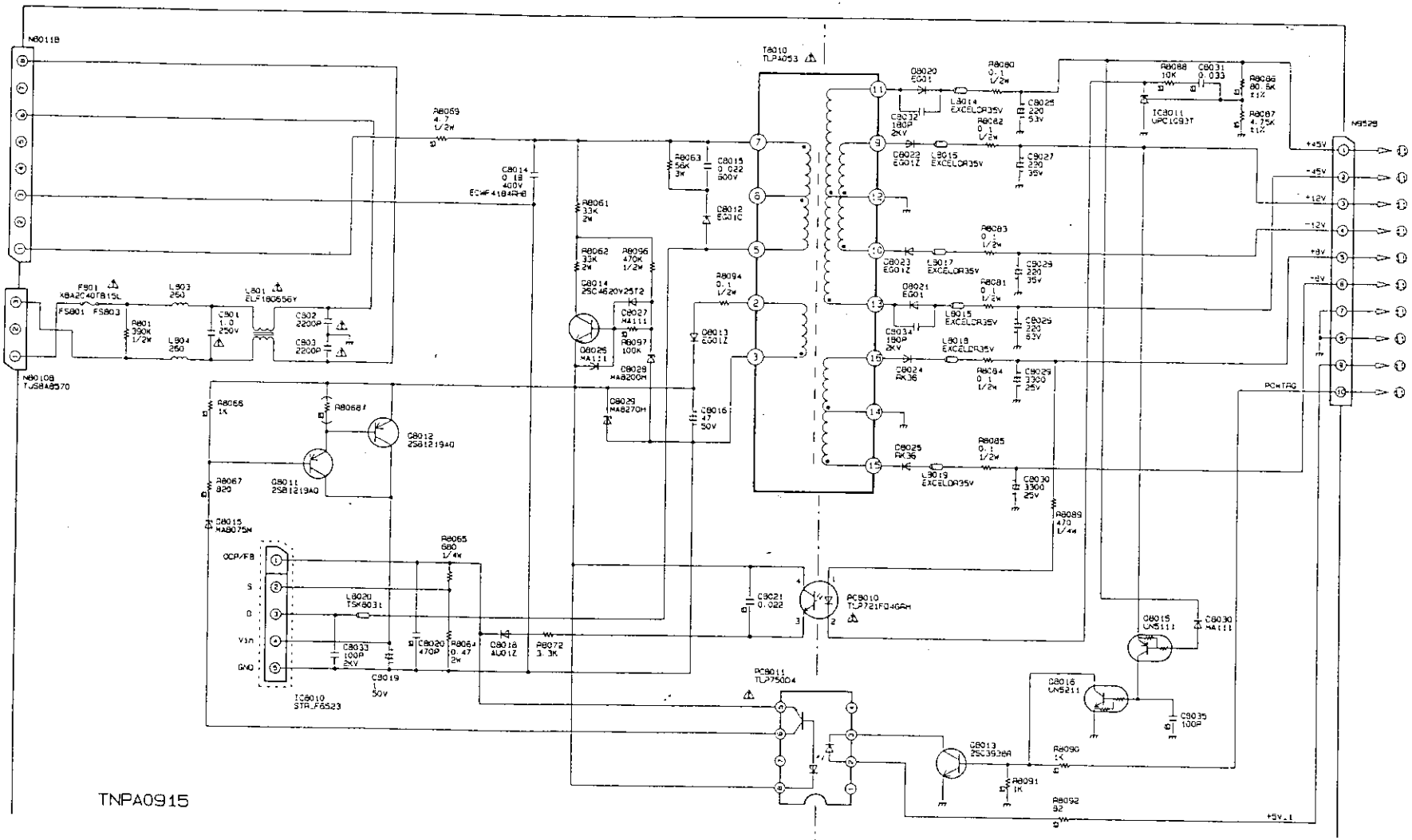

Important safety notice

Components identified by ⚠ mark have special characteristics important for safety. When replacing any of components, use only manufacturer's specified parts.

SYM	DATE	REVISION	SIGNED	CHECKED	SYM	DATE	REVISION	SIGNED	CHECKED

RESISTOR: Metal film, Metal oxide, Fusible, Metal film, Fuse resistor, Chip
CAPACITOR: Polyester, Metallized polyester, Polypropylene, Polycarbonate, Ceramic (B.L), Temperature compensating ceramic, Ceramic, Tantalum, Chip

TITLE

PREPARED	T. Shimura	REVIEWED	T. Kinoshita
APPROVED			

ENGINEERING DEPT. SECTION

MODEL NO. TX-01F72HM (GV30)

DRAWING NO. KS1F72HM. 100

ISSUED 1997. 2. 21

DES. Kouga 1997. 2. 21

CHK. Matsutani 1997. 3. 29

MATSUSHITA ELECTRIC INDUSTRIAL CO., LTD.

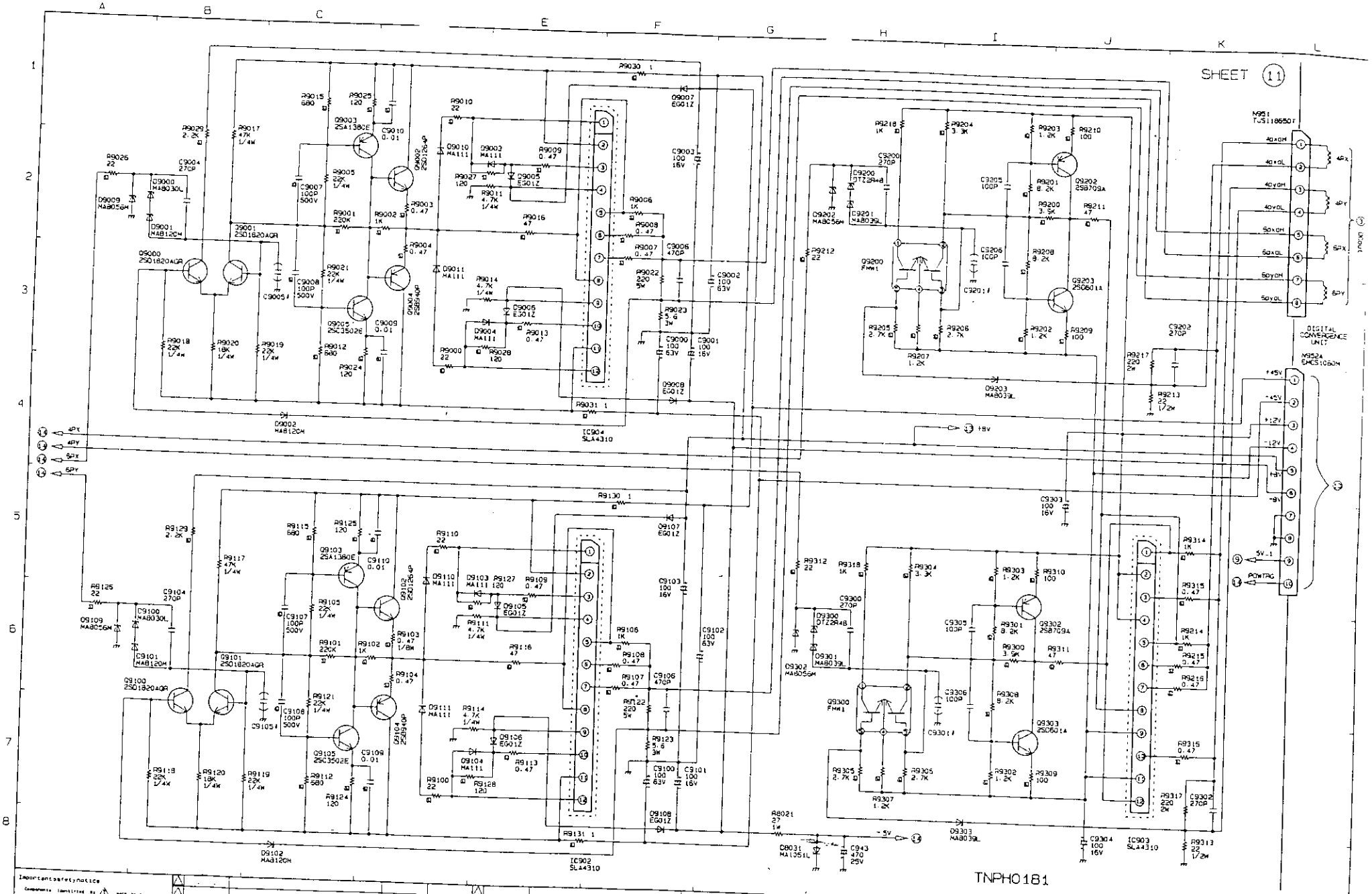
SHEET 11
IC904 SLA4310
IC902 SLA4310
IC903 SLA4310
N951 TVS1186507
N952A EMCS1060M
DIGITAL CONVERGENCE UNIT
TNPH0181
Important safety notice
Components identified by ⚠ mark have special characteristics important for safety. When replacing any of components, use only manufacturer's specified parts.
DATE
REVISION
SIGNED
CHECKED
RESISTOR
CAPACITOR
TITLE
PREPARED
T. Shimura
REVISED
T. Kinoshita
APPROVED
ENGINEERING DEPT. SECTION
MODEL NO. TX-01F72NH (GV30)
DRAWING NO. XB1F72NH-110
ISSUED 1997.2.21
MATSUSHITA ELECTRIC INDUSTRIAL CO., LTD.

Important safety notice

Components identified ⚠ by mark have special characteristics important for safety. When replacing any of components, use only manufacturer's specified parts.

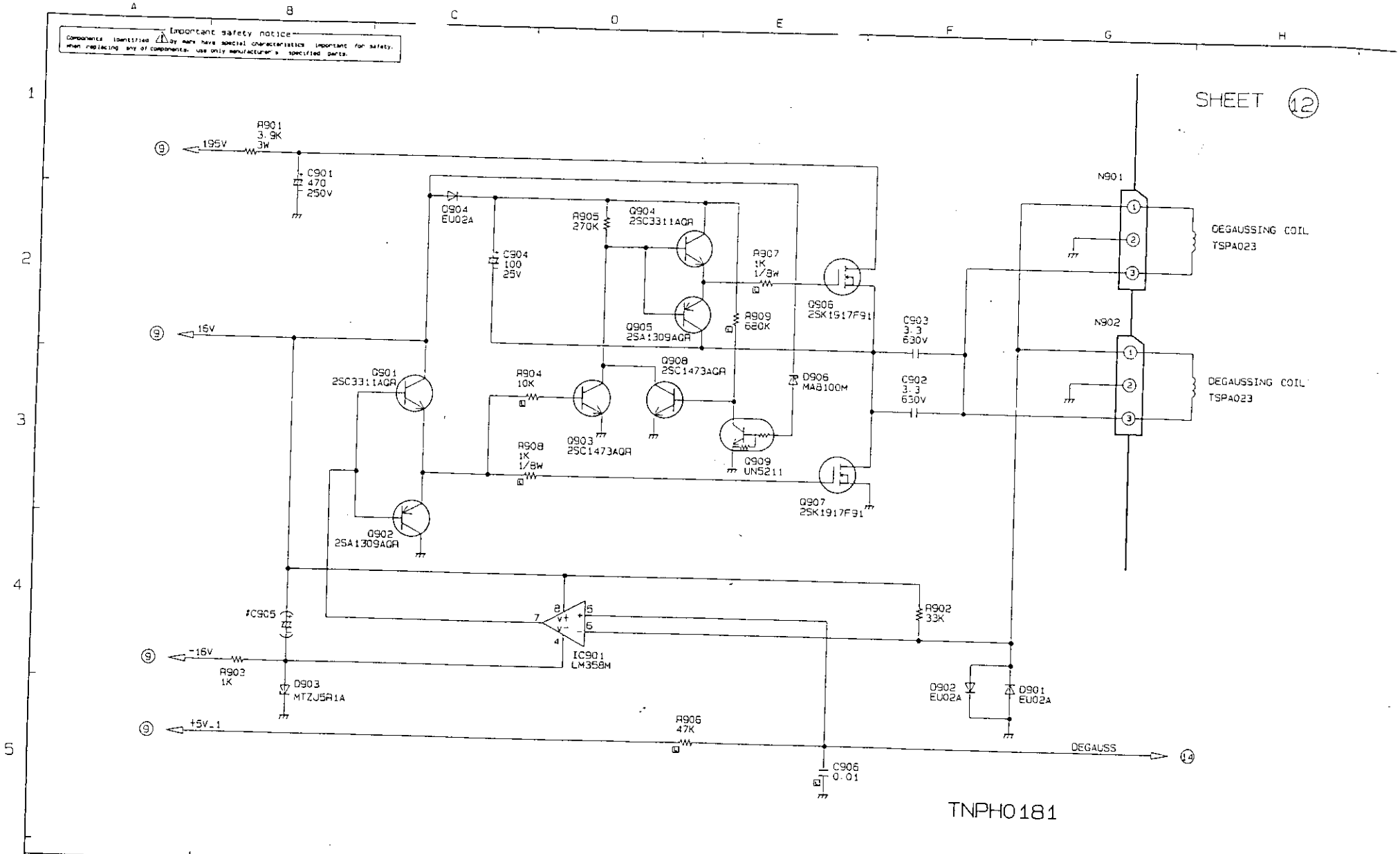

TNPH0181

SYM	DATE	REVISION	SIGNED	CHECKED
△				
△				
△				
△				
△				

RESISTOR: △ Solid ○ Nonflammable ⊠ Metal Oxide ☑ Flame Proof Rectangular ⊗ Fusible ◎ Metal Film ☐ Wire Wound

CAPACITOR: Ⓜ Polyester ⓜ Metalized Polyester Ⓢ Polystyrene ⊠ Polypropylene △ Mica ◎ Ceramic (SL) ⊗ Temperature Compensation ○ Ceramic Ⓣ Tantalum Ⓛ Ⓒ CHIP Ⓛ Ⓒ CHIP

TITLE

ENGINEERING DEPT. SECTION

PREPARED	REVIEWED	APPROVED
	T. Shimura	T. Kinoshita

MODEL NO.	TX-01F72NM (GV30)		
DRAWING NO.	KB1F72N12.120	作成者 Kouga	作成日 1997.2.21
ISSUED	1997.2.21	修正者 Kouga	修正日 1997.7.11

MATSUSHITA ELECTRIC INDUSTRIAL CO., LTD.

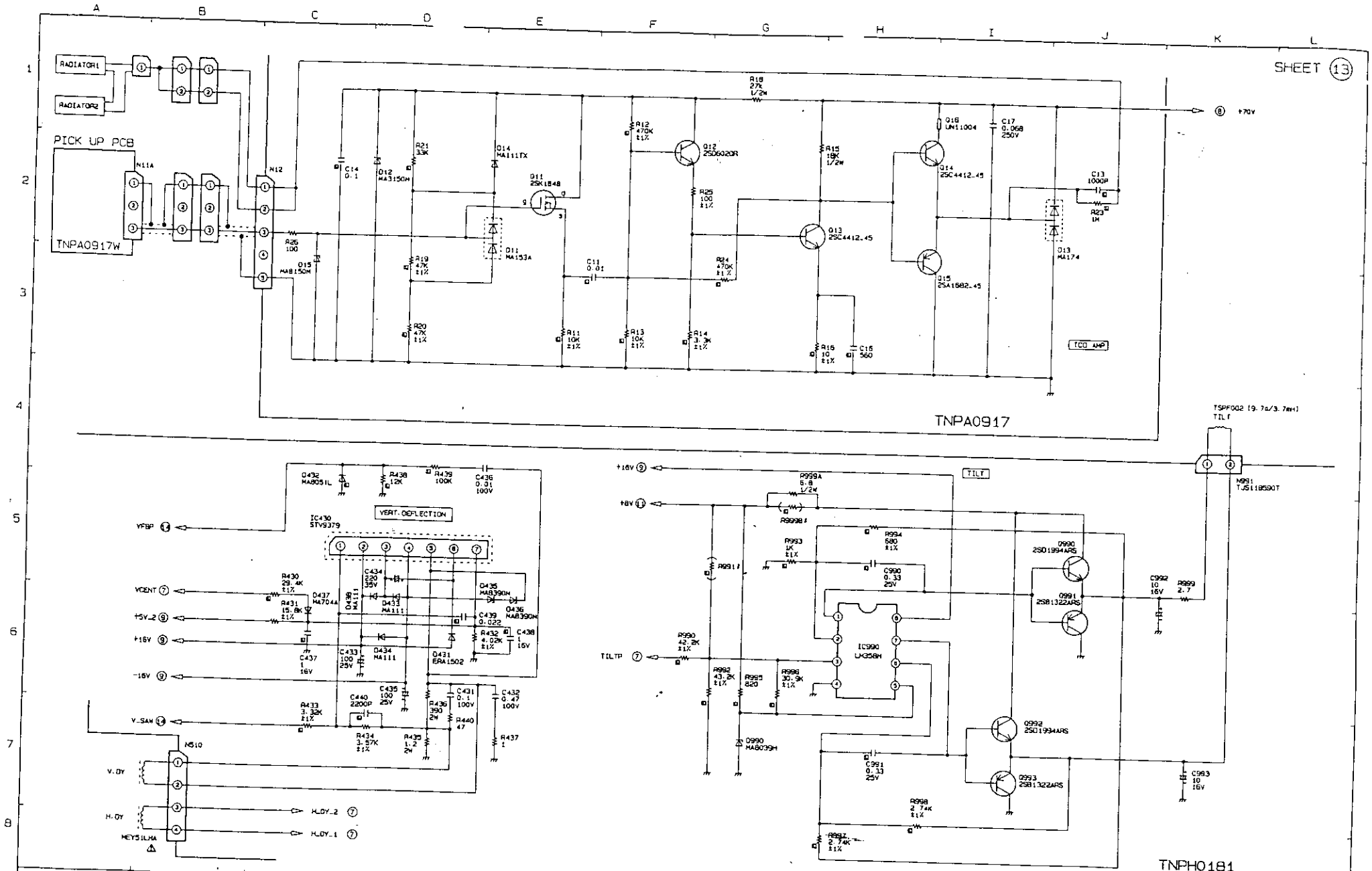

Importantsafetynotice

Components identified by ⚠ mark have special characteristics important for safety. When replacing any of components, use only manufacturer's specified parts.

SYM	GATE	REVISION	SIGNED	CHECKED	SYM	GATE	REVISION	SIGNED	CHECKED

RESISTOR: Solid / Metalmelain / Metal Oxide / Film Power Resistor / Acetate / Metal film / Wire Wound
CAPACITOR: Polyester / Polystyrene / Polypropylene / Polycarbonate / Ceramic (B.L) / Temperature Compensating / Electrolytic / Tantalum / Mica / Chip
TITLE

PREPARED	REVIEWED	APPROVED
	T.Shimura	T.Kinoshita

ENGINEERING DEPT. SECTION

MODEL NO.	TX-01F72-HC	IGV301	
DRAWING NO.	XB1F72HC. 130	設図 Matsutani	設図日 1998. 1. 19
ISSUED	1998. 1. 19	検図	検図日

MATSUSHITA ELECTRIC INDUSTRIAL CO., LTD.

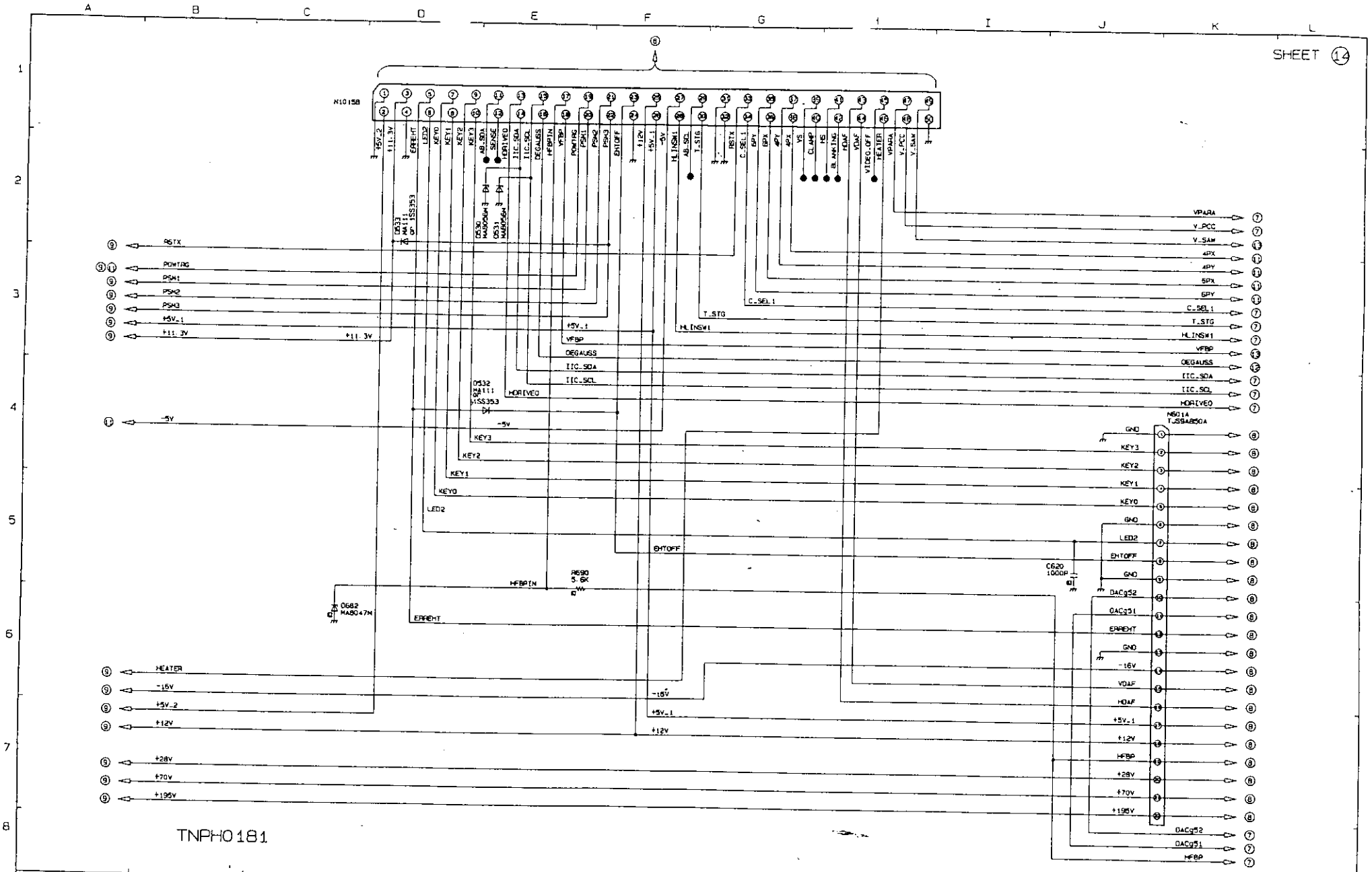

Importantsafetynotice

Components identified by ⚠ mark have special characteristics important for safety. When replacing any of components, use only manufacturer's specified parts.

SYM	DATE	REVISION	SIGNED	CHECKED	SYM	DATE	REVISION	SIGNED	CHECKED

RESISTOR: Wire; Nonflammable; Metal Oxide; Fuse Proof Resistor; Fusible; Metal Film; Wire Wound; Chip
CAPACITOR: Polyester; Metalized Polyester; Polystyrene; Polypropylene; Ceramic (M.L); Temperature Compensating; Ceramic; Tantalum; Chip
TITLE

PREPARED	REVIEWED	APPROVED
T.Shimura	T.Kinoshita	

ENGINEERING DEPT. SECTION

MODEL NO.	TX-01F72NM	(GV30)		
DRAWING NO.	K01F72NM. 140	#64 Kouga	#A8	1997. 2. 21
ISSUED	1997. 2. 21	#78 Matsutani	#A8	1997. 7. 11

MATSUSHITA ELECTRIC INDUSTRIAL CO., LTD.

2) RESERVATION TIMING

		MODE 2	MODE 3	MODE 4	MODE 5
		VGA(Industry Standard) 640×480 @60Hz	VESA Standard 640×480 @75Hz	VESA Standard 1024×768 @75Hz	MAC 1152×870 @75Hz
DOT CLOCK		25.1750MHz	31.5000MHz	78.7500MHz	100.000MHz
HORIZ	fH	31.469kHz	37.500kHz	60.023kHz	68.681kHz
	A-Period	31.778 us(800 dots)	26.667 us(840 dots)	16.660 us(1312 dots)	14.560 us(1456 dots)
	B-Blanking	6.356 us(160 dots)	6.350 us(200 dots)	3.657 us(288 dots)	3.040 us(304 dots)
	C-Sync width	3.813 us(96 dots)	2.032 us(64 dots)	1.219 us(96 dots)	1.280 us(128 dots)
	D-Back porch	1.907 us(48 dots)	3.810 us(120 dots)	2.235 us(176 dots)	1.440 us(144 dots)
	E-Active	25.422 us(640 dots)	20.317 us(640 dots)	13.003 us(1024 dots)	11.520 us(1152 dots)
	F-Front porch	0.636 us(16 dots)	0.508 us(16 dots)	0.203 us(16 dots)	0.320 us(32 dots)
VERT	fV	59.940Hz	75.000Hz	75.029Hz	75.061Hz
	A-Period	16.683 ms(525 lines)	13.333 ms(500 lines)	13.328 ms(800 lines)	13.322 ms(915 lines)
	B-Blanking	1.430 ms(45 lines)	0.534 ms(20 lines)	0.533 ms(32 lines)	0.655 ms(45 lines)
	C-Sync width	0.064 ms(2 lines)	0.080 ms(3 lines)	0.050 ms(3 lines)	0.044 ms(3 lines)
	D-Back porch	1.049 ms(33 lines)	0.427 ms(16 lines)	0.466 ms(28 lines)	0.568 ms(39 lines)
	E-Active	15.253 ms(480 lines)	12.800 ms(480 lines)	12.795 ms(768 lines)	12.667 ms(870 lines)
	F-Front porch	0.318 ms(10 lines)	0.027 ms(1 lines)	0.017 ms(1 lines)	0.044 ms(3 lines)
Sync polarity (H/V)		Negative / Negative	Negative / Negative	Positive / Positive	Negative / Negative

		MODE 6	MODE 7	MODE 8	MODE 9
		VESA Standard 1280×1024 @75Hz	VESA Standard 1280×1024 @85Hz	1600×1200 @85Hz	1600×1200 @90Hz
DOT CLOCK		135.000MHz	157.500MHz	229.500MHz	243.000MHz
HORIZ	fH	79.976kHz	91.146kHz	106.250kHz	112.500kHz
	A-Period	12.504 us(1688 dots)	10.971 us(1728 dots)	9.412 us(2160 dots)	8.889 us(2160 dots)
	B-Blanking	3.022 us(408 dots)	2.844 us(448 dots)	2.440 us(560 dots)	2.304 us(560 dots)
	C-Sync width	1.067 us(144 dots)	1.016 us(160 dots)	0.837 us(192 dots)	0.790 us(192 dots)
	D-Back porch	1.837 us(248 dots)	1.422 us(224 dots)	1.325 us(304 dots)	1.251 us(304 dots)
	E-Active	9.481 us(1280 dots)	8.127 us(1280 dots)	6.972 us(1600 dots)	6.584 us(1600 dots)
	F-Front porch	0.119 us(16 dots)	0.406 us(64 dots)	0.279 us(64 dots)	0.263 us(64 dots)
VERT	fV	75.025Hz	85.024Hz	85.000Hz	90.000Hz
	A-Period	13.329 ms(1066 lines)	11.761 ms(1072 lines)	11.765 ms(1250 lines)	11.111 ms(1250 lines)
	B-Blanking	0.525 ms(42 lines)	0.527 ms(48 lines)	0.471 ms(50 lines)	0.445 ms(50 lines)
	C-Sync width	0.038 ms(3 lines)	0.033 ms(3 lines)	0.028 ms(3 lines)	0.027 ms(3 lines)
	D-Back porch	0.475 ms(38 lines)	0.483 ms(44 lines)	0.433 ms(46 lines)	0.409 ms(46 lines)
	E-Active	12.804 ms(1024 lines)	11.235 ms(1024 lines)	11.294 ms(1200 lines)	10.667 ms(1200 lines)
	F-Front porch	0.013 ms(1 lines)	0.011 ms(1 lines)	0.009 ms(1 lines)	0.009 ms(1 lines)
Sync polarity (H/V)		Positive / Positive	Positive / Positive	Positive / Positive	Positive / Positive

1) PRESET TIMING

		MODE 1
		VESA Proposal 1600×1200 @75Hz
DOT CLOCK		202.500MHz
HORIZ	fH	93.750kHz
	A-Period	10.667 us(2160 dots)
	B-Blanking	2.765 us(560 dots)
	C-Sync width	0.948 us(192 dots)
	D-Back porch	1.501 us(304 dots)
	E-Active	7.901 us(1600 dots)
	F-Front porch	0.316 us(64 dots)
VERT	fV	75.000Hz
	A-Period	13.333 ms(1250 lines)
	B-Blanking	0.533 ms(50 lines)
	C-Sync width	0.032 ms(3 lines)
	D-Back porch	0.491 ms(46 lines)
	E-Active	12.800 ms(1200 lines)