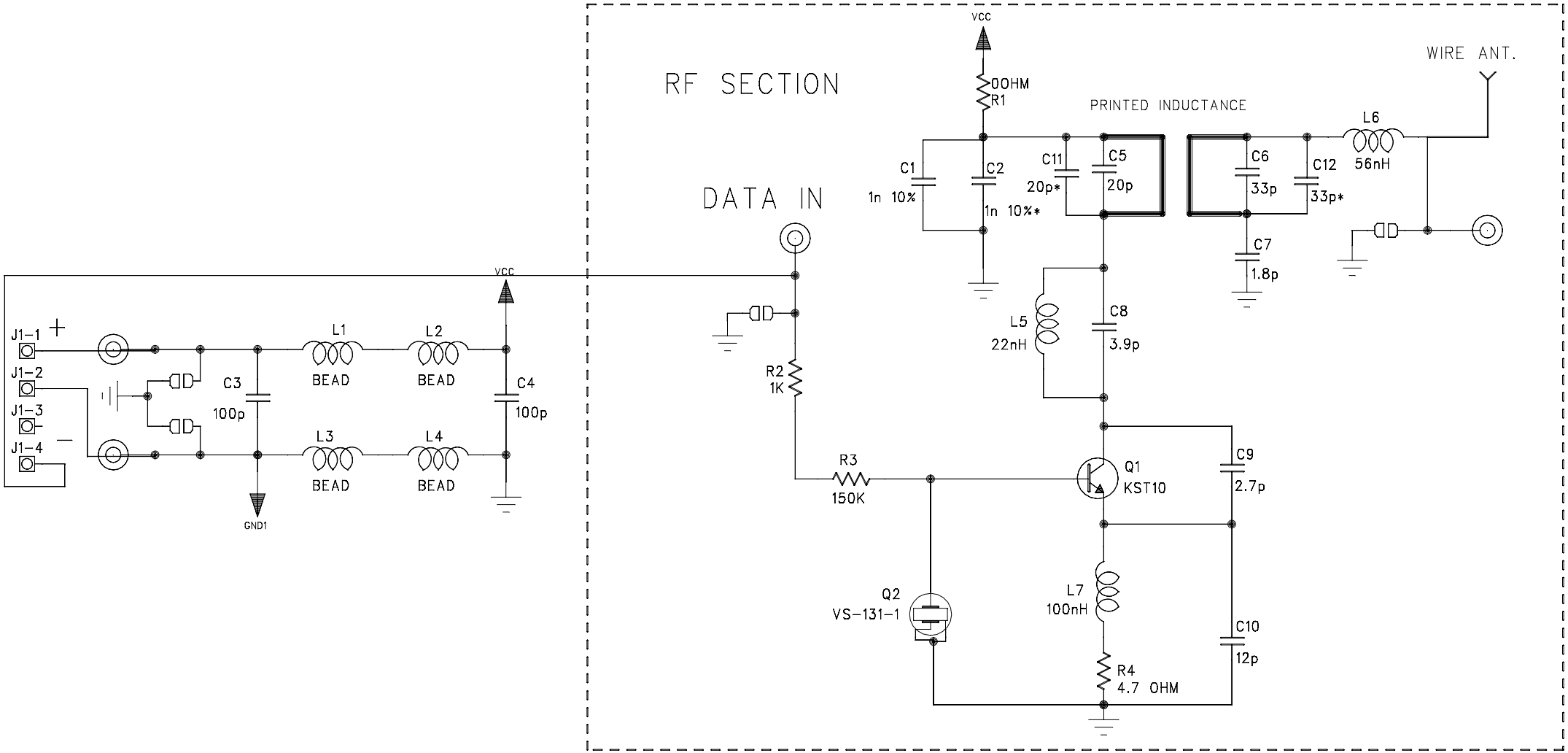

CONFIDENTIAL

This document contains information which is proprietary to Visonic Ltd. Israel. The use, copy or dissemination of this material for any purpose other than that which it is intended, is prohibited without the prior written consent of Visonic Ltd.

Date Released: to whom:

Visonic LTD.

			PRODUCT NAME: MCT-430		UPD	ECOs
			DRAWING TYPE: SCHEMATIC DIAGRAM		1	D-02-340
APX.2-1-3	NAME	DATE	SIGNATURE	PCB Rev:0 DOC Rev:0	2	
DESIGNED	RONEN D.	7.04.02		CATALOG NO: E-3643-0	3	
DREW	ANDREI K.	9.04.02		DRAWING NO: EE-3643-00	4	
UPDATED				CAD FILE: EE364300.SCH	5	
APPROVED	SHAY Z.	23.04.02		SHEET #/OF: 1 / 1	6	