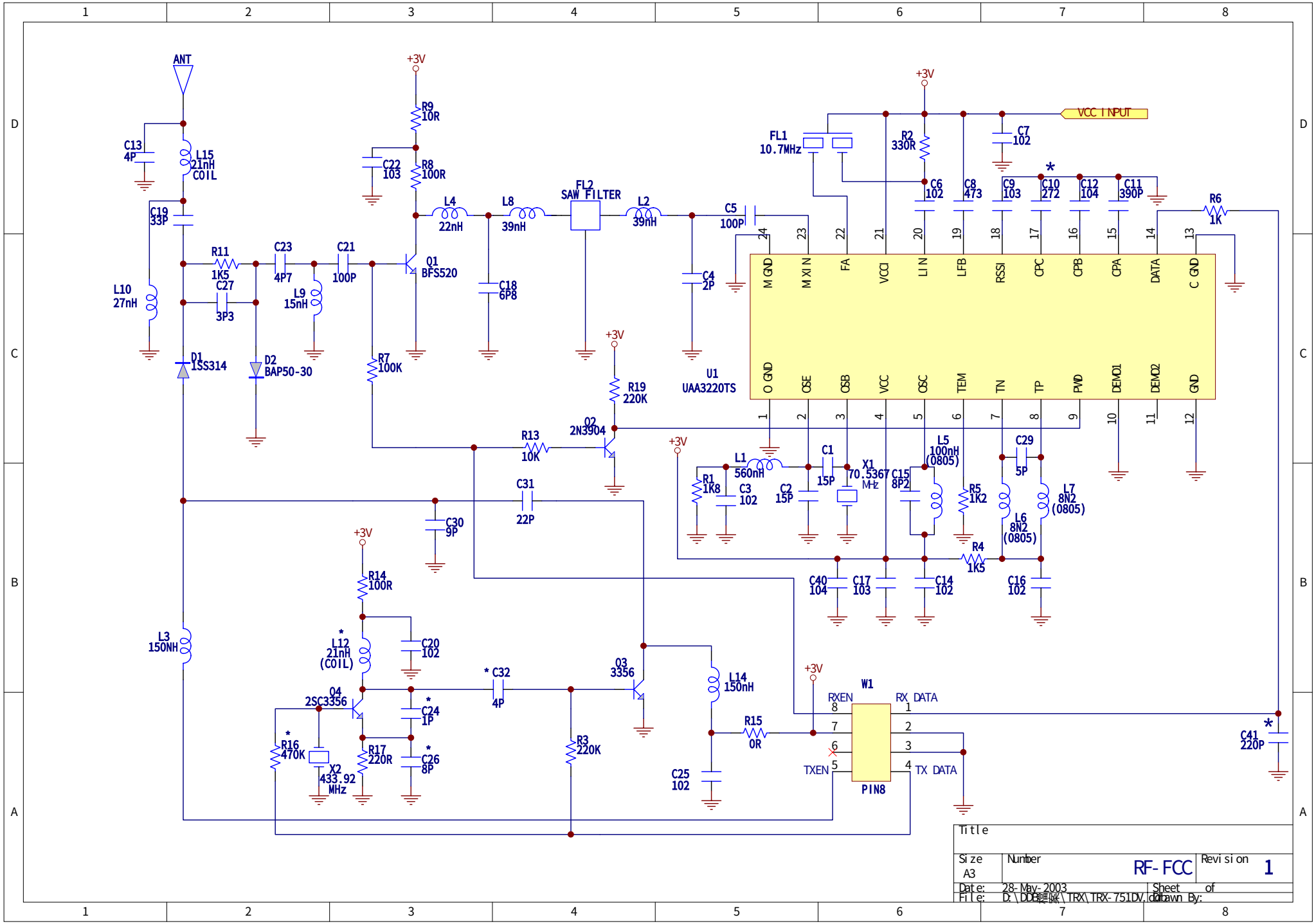

Title			
Size A3	Number	RF-FCC	Revision 1
Date: 28-May-2003		Sheet of	
File: D:\DDB檔案\TRX\TRX-751DV.ddb		Drawn By:	