REVISION	DATE	DESCRIPTION	CONCERN. PCL NO	DRAWN BY	ENGINEER	MANAGER
A	2 9 96	INITIAL RELEASE		JN	JN	DP
B	4 11 96	ADDED R3, R4 FOR M-31		JN	JN	DP
C	4 29 96	REVISED C4		JN	JN	DP
D	11 11 96	CHANGED U2 FROM 93AA TO 93LC46	M96-0164	EH	EH	JG
E	4 28 99	BOARD REV. D TO PCB0182L FOR BATTERY TAB IN MACH.	PCL# 327	MHO	DJP	JG
F	12 4 00	ADDED FIDUCIALS TO THE BOTTOM SIDE OF PANEL RAILING. REVISED PCB0182L TO PCB0182M. UPDATED TSM-31 AND 32 P N TO M-31 AND M-32	II-0019	TS	TS	LC

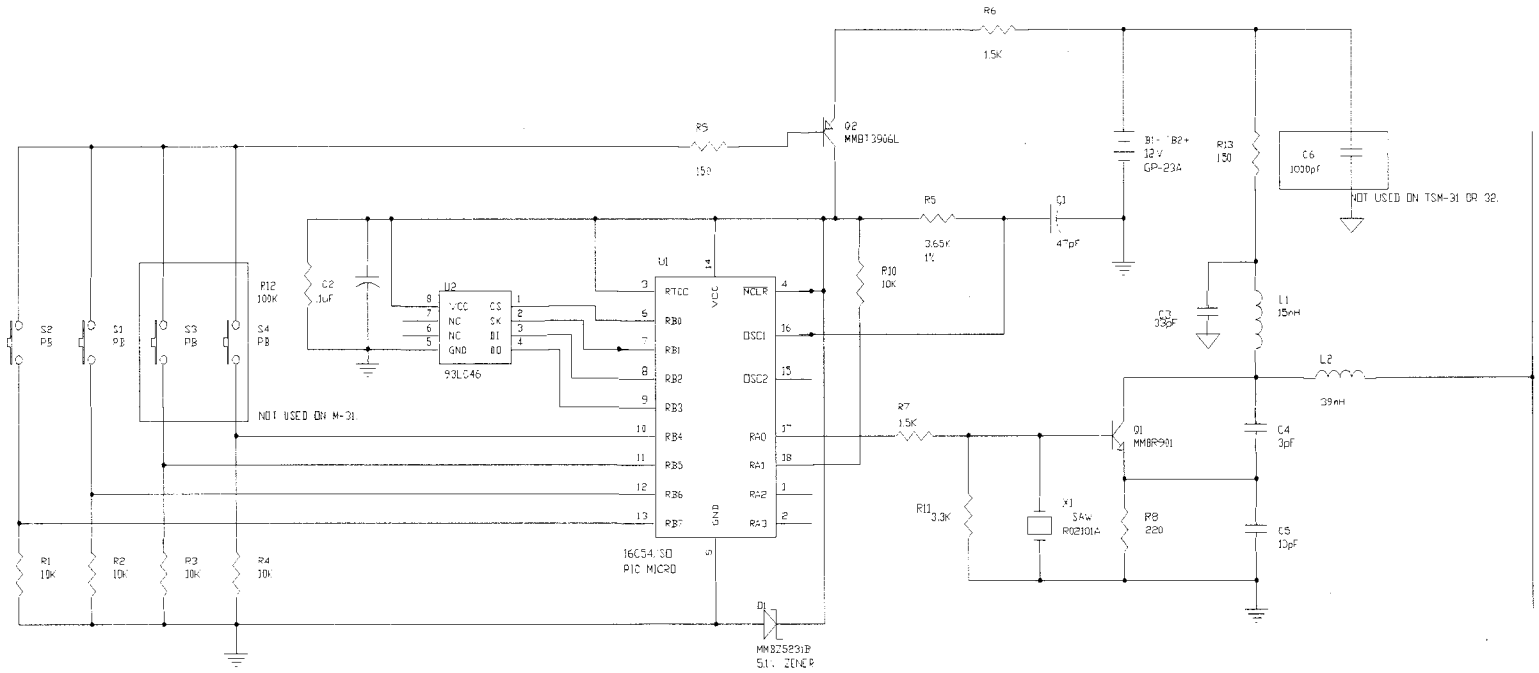

NOTES:

1. ALL RESISTORS ARE 0.1W, 5%, 0805 FILM UNLESS OTHERWISE NOTED

2. ALL CAPACITORS ARE 5%, 0805 CERAMIC UNLESS OTHERWISE NOTED

3. ANTENNA IS PART OF PCB

4. B3 AND B4 NOT USED WITH TSM-31 OR NOT USED ON BOTHER TSM-31 OR 32

5. REFERENCE PCB0182M

CHECKED BY:

ENGINEER

PROJ MGR

CODE ALARM, INC.
950 EAST WHITCOMB
MADISON HEIGHTS, MI 48071
(248) 583-8921

5.1 W
3 & 4 BUTTON (433.92 MHz) ROLLING CODE

Size: B | Document Number: 004020 M-31 AND M-32 | Rev: F

Date: P 06 01 | Sheet 1 of