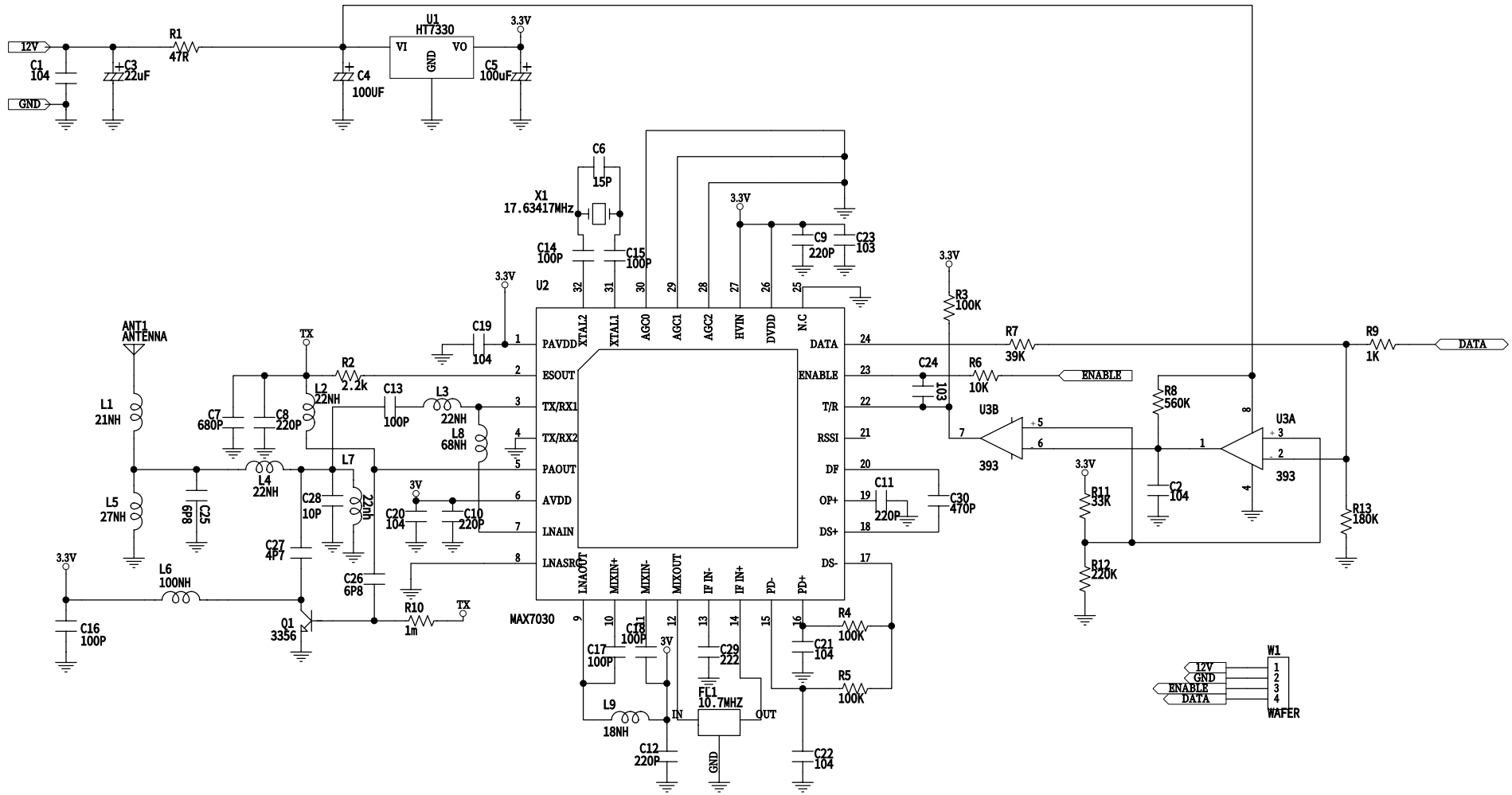

Title		
Size A2	Number	Revision 1
Date: 8-Aug-2005		Sheet of
File: C:\ddb-work\MOPER-ANT.ddb		Drawn By: