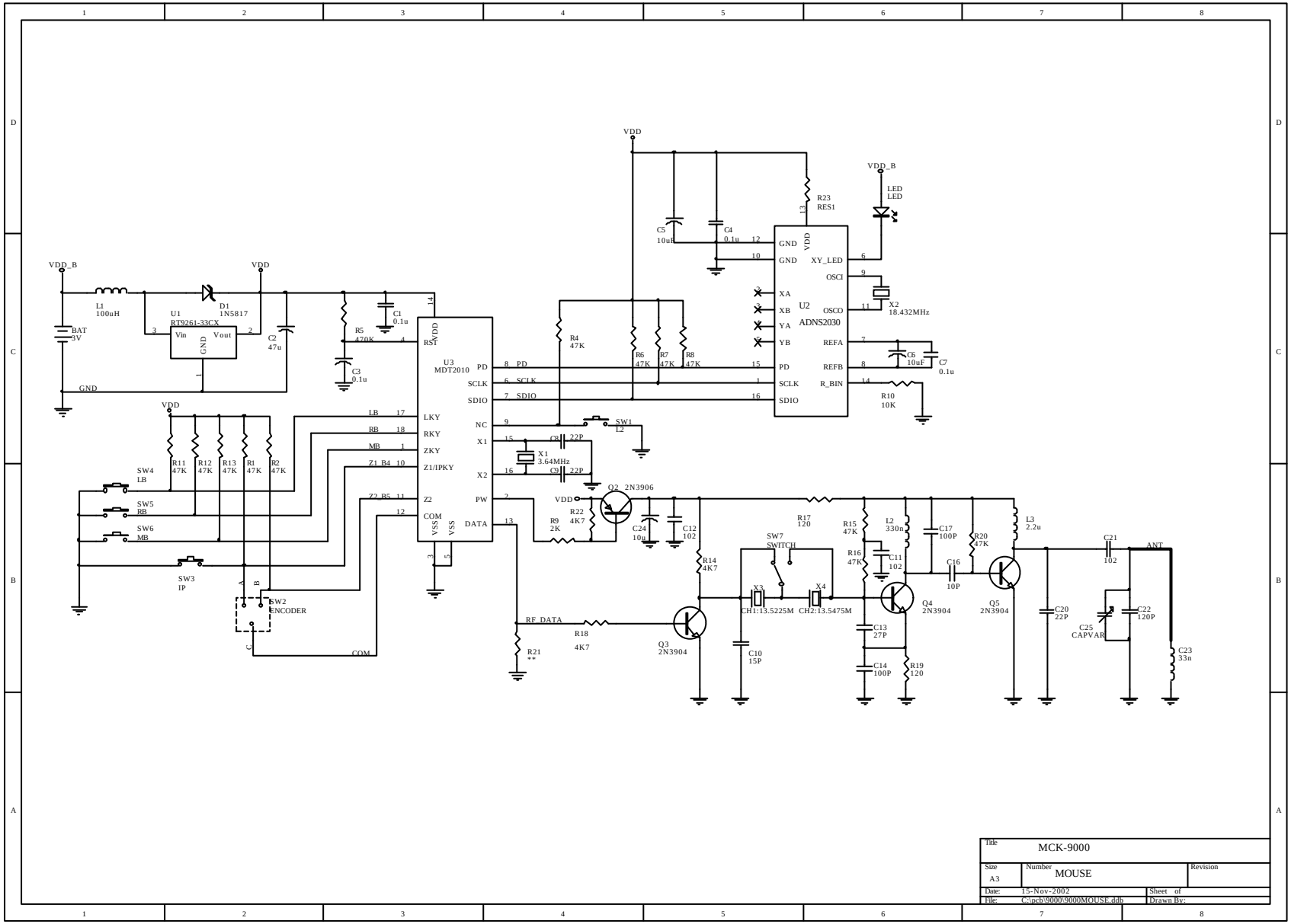

Title	MCK-9000	
Size A3	Number MOUSE	Revision
Date: 15-Nov-2002		Sheet of
File: C:\pcb\9000\9000MOUSE.ddb		Drawn By: