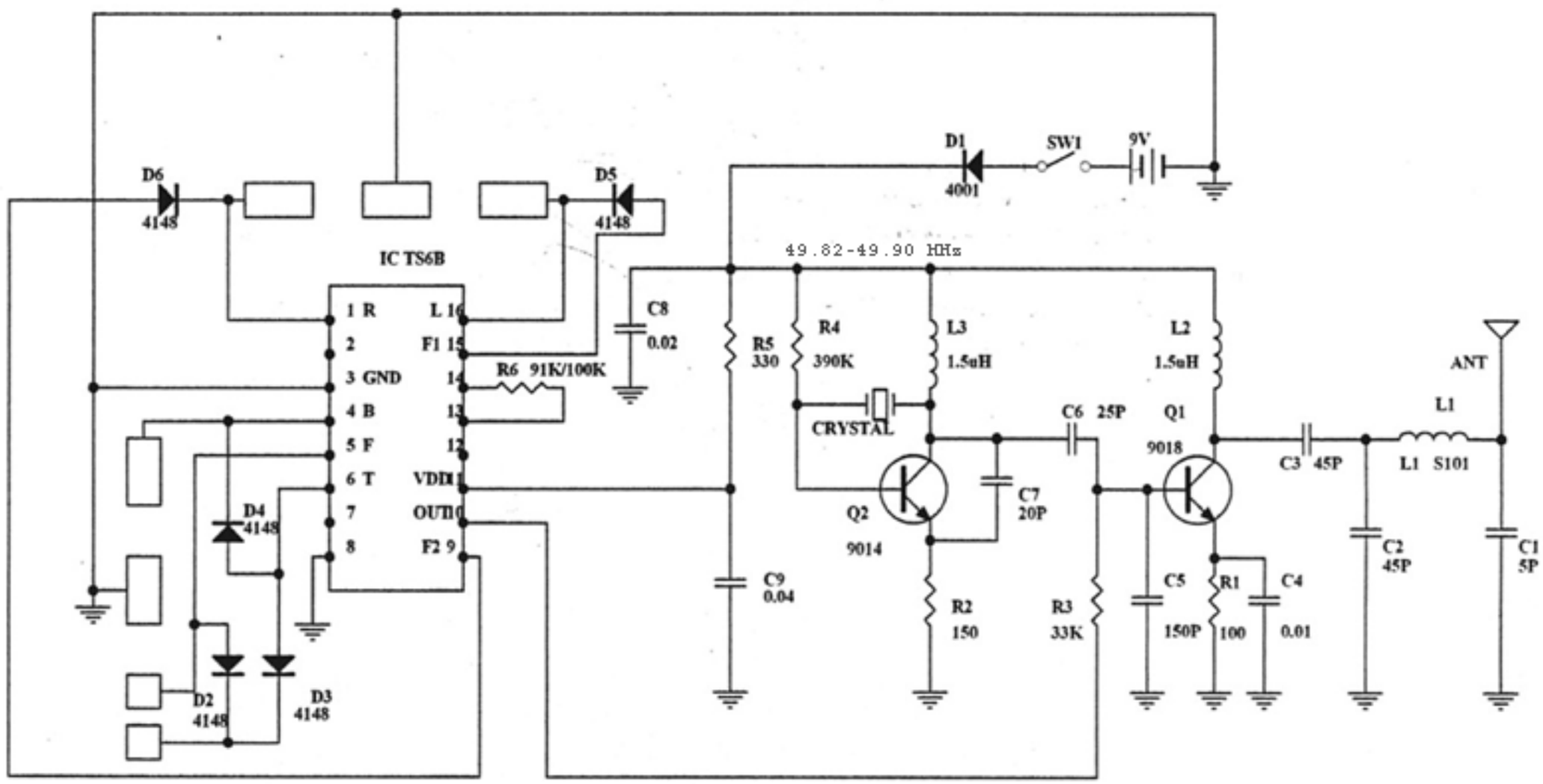

Title	FCC	
Size A4	Number 60-4385 49.86MHz TX	Revision
Date 11-Jun-2004	Sheet of	
File A:\4385T9 NEW	Drawn By	