SUNCON TOYS INDUSTRY LTD
FCC ID : GLE136121
JOB # : 132H0

EXHIBIT # : 3

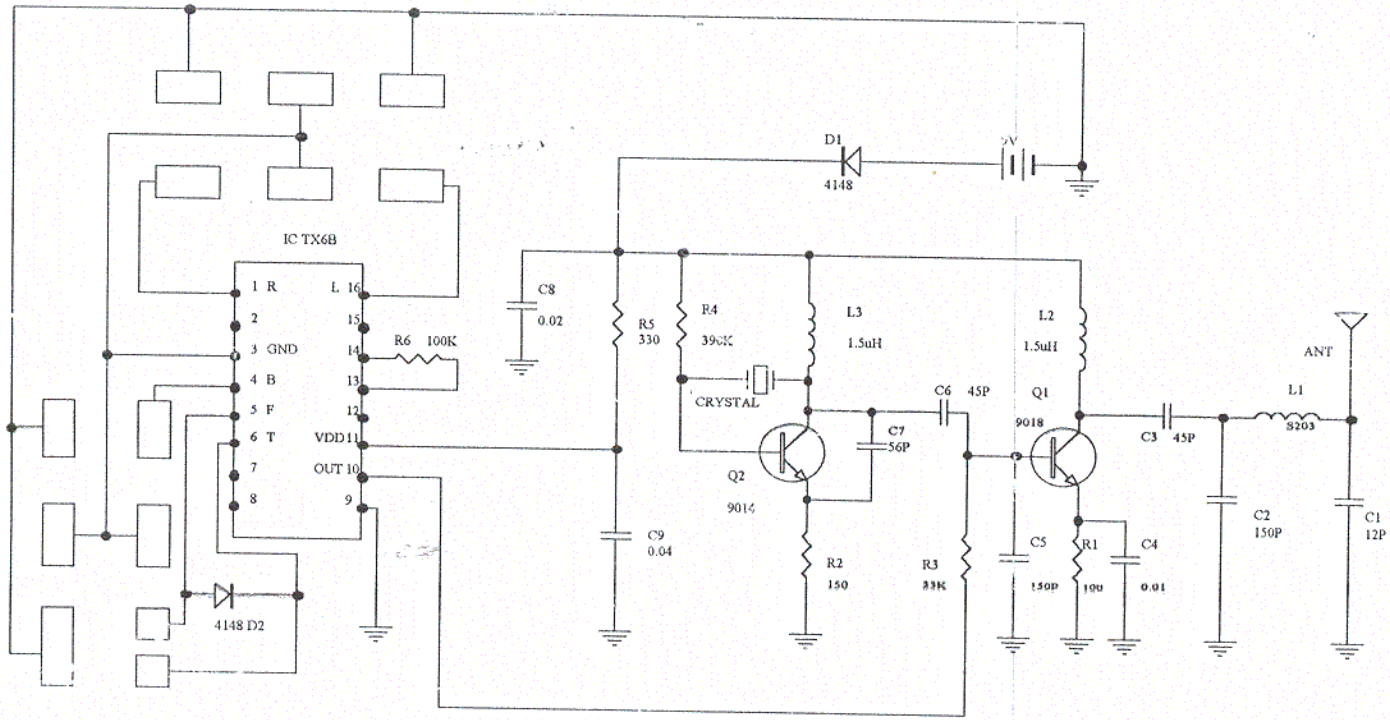

136121

Title	F.C.C		
Size A4	Number 60-4268 27.145MHZ TX		Revision
Date: 17-Apr-2000		Sheet of	
File: C:\DVSCH\4268T27.NEW		Drawn By:	