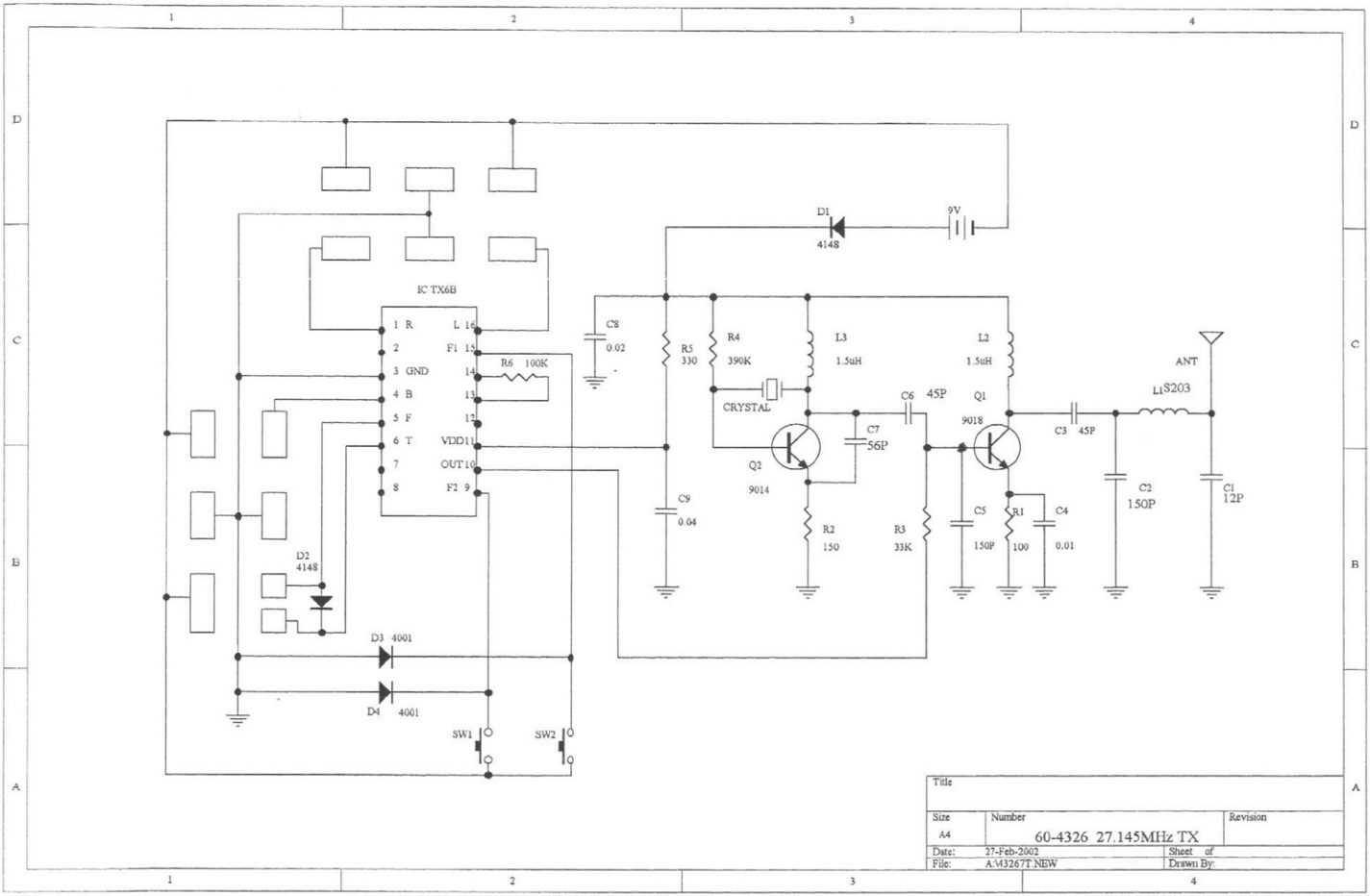
IC TX6B
1 R
2
3 GND
4 B
5 F
6 T
7
8
L 16
F1 15
14
13
12
VDD11
OUT10
F2 9
R6 100K
D1
4148
9V
C8
0.02
R5
330
R4
390K
L3
1.5uH
L2
1.5uH
CRYSTAL
C6 45P
Q1
9018
C7
56P
Q2
9014
C9
0.04
R2
150
R3
33K
C5
150P
R1
100
C4
0.01
C3 45P
ANT
L1S203
C2
150P
C1
12P
D2
4148
D3 4001
D4 4001
SW1
SW2
Title
Size
A4
Number
60-4326 27.145MHz TX
Revision
Date: 27-Feb-2002
Sheet of
File: A:\4326T.NEW
Drawn By: