Circuit Diagram

HUB 2.0

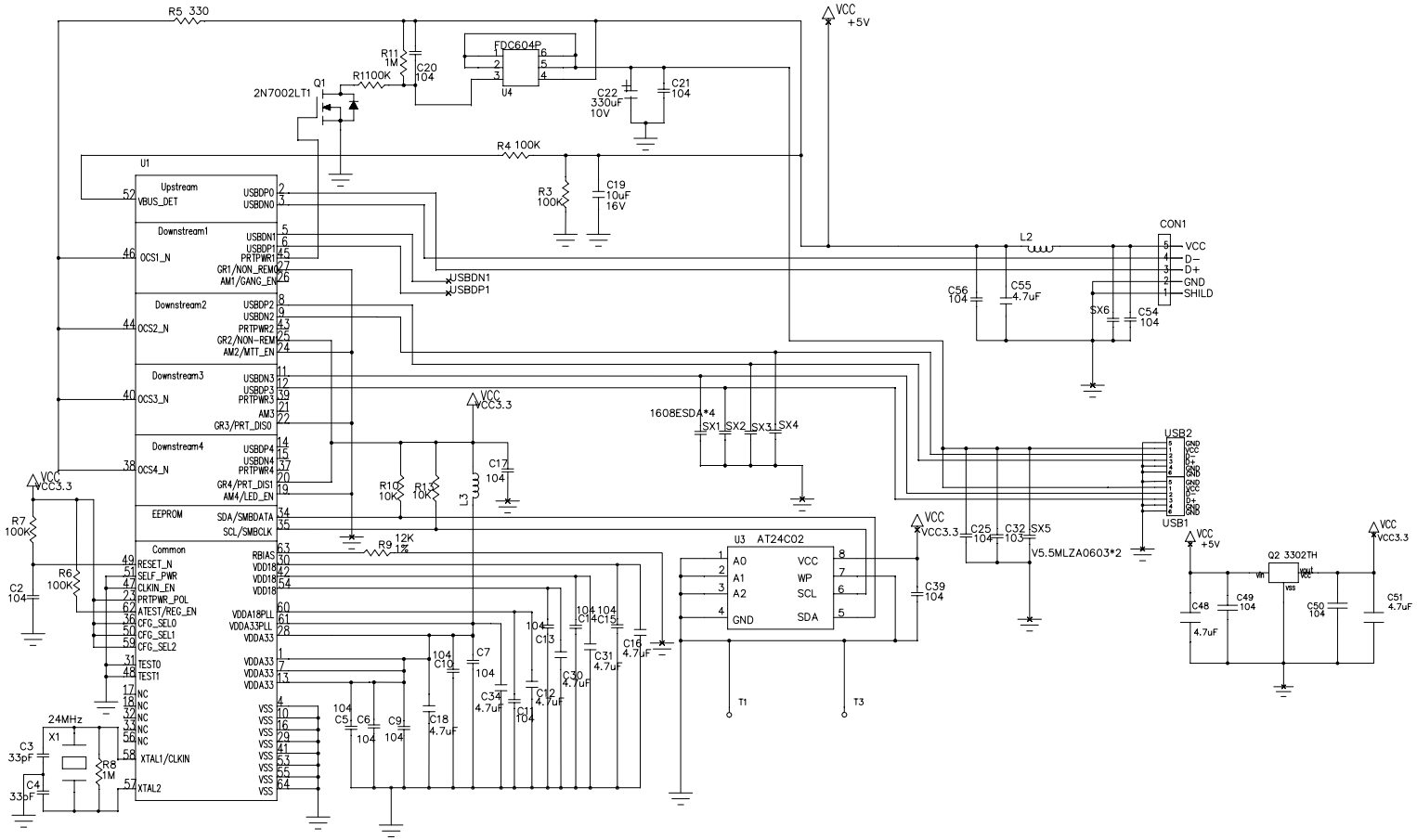

KEYBOARD

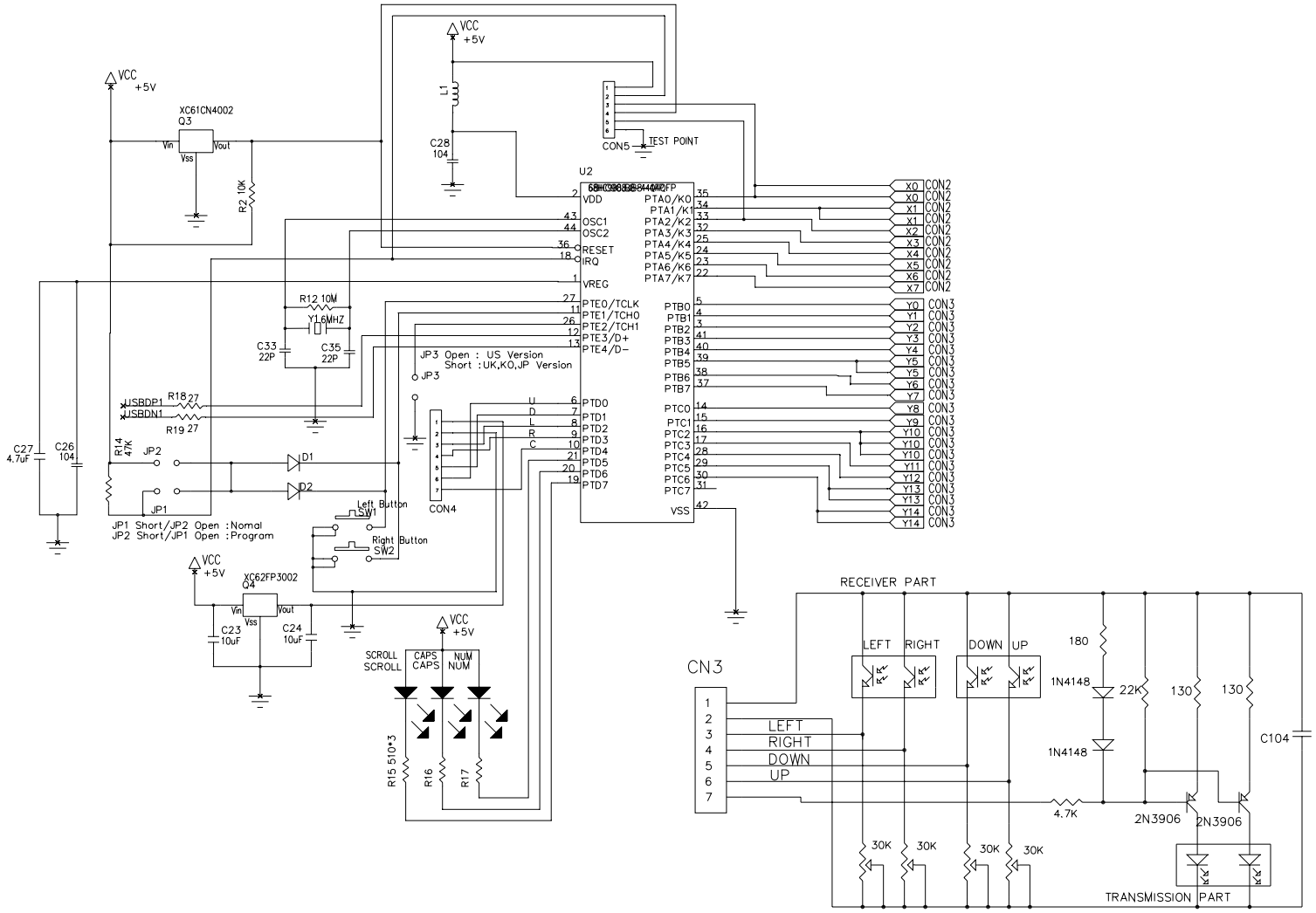
VCC
+5V
XC61CN4002
Q3
Vin
Vout
Vss
R2 10K
L1
C28
104
CON5
TEST POINT
U2
VDD
OSC1
OSC2
RESET
IRQ
VREG
PTE0/TCLK
PTE1/TCH0
PTE2/TCH1
PTE3/D+
PTE4/D-
PTA0/K0
PTA1/K1
PTA2/K2
PTA3/K3
PTA4/K4
PTA5/K5
PTA6/K6
PTA7/K7
PTB0
PTB1
PTB2
PTB3
PTB4
PTB5
PTB6
PTB7
PTC0
PTC1
PTC2
PTC3
PTC4
PTC5
PTC6
PTC7
PTD0
PTD1
PTD2
PTD3
PTD4
PTD5
PTD6
PTD7
VSS
X0 CON2
X0 CON2
X1 CON2
X1 CON2
X2 CON2
X3 CON2
X4 CON2
X5 CON2
X6 CON2
X7 CON2
Y0 CON3
Y1 CON3
Y2 CON3
Y3 CON3
Y4 CON3
Y5 CON3
Y5 CON3
Y6 CON3
Y7 CON3
Y8 CON3
Y9 CON3
Y10 CON3
Y10 CON3
Y10 CON3
Y11 CON3
Y12 CON3
Y13 CON3
Y13 CON3
Y14 CON3
Y14 CON3
R12 10M
Y1 6MHZ
C33
22P
C35
22P
JP3 Open : US Version
Short :UK,KO,JP Version
JP3
USBDP1
USBDN1
R18 27
R19 27
C27
4.7uF
C26
104
R14
47K
JP2
JP1
D1
D2
CON4
Left Button
SW1
Right Button
SW2
JP1 Short/JP2 Open :Nomal
JP2 Short/JP1 Open :Program
XC62FP3002
Q4
C23
10uF
C24
10uF
SCROLL
SCROLL
CAPS
CAPS
NUM
NUM
R15 510*3
R16
R17
RECEIVER PART
CN3
LEFT
RIGHT
DOWN
UP
180
1N4148
22K
130
130
C104
4.7K
2N3906
2N3906
30K
TRANSMISSION PART