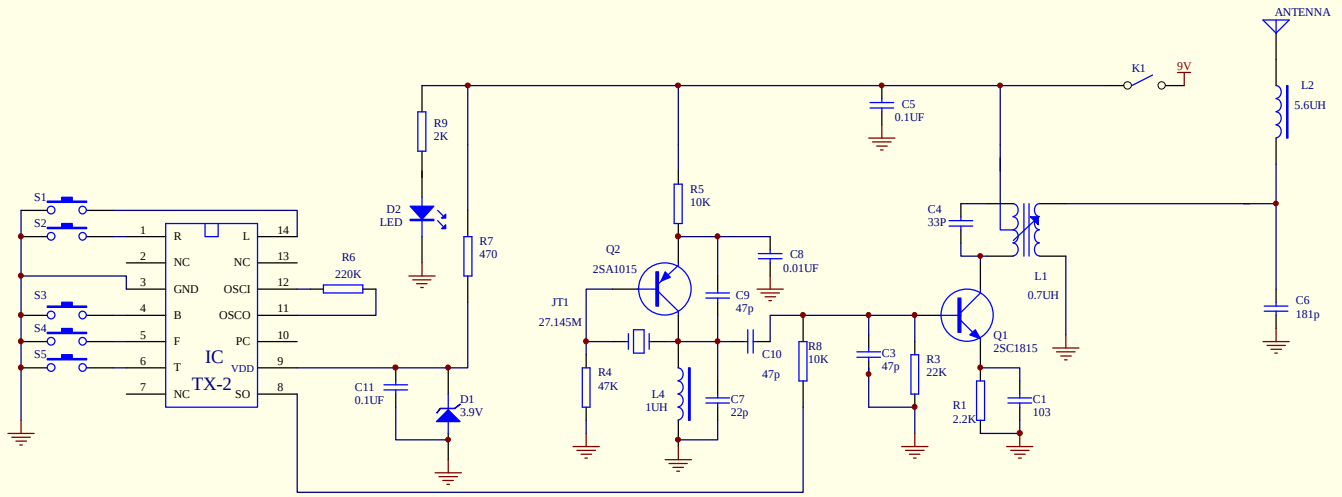

Title	KZ-2003A1仱籵楷扞埻燴芞 (27MHZ)	
Size A4	Number	Revision
Date: 22-May-2004		Sheet of
File: D:\埻燴芞\毙璃\MyDesign.ddb		Drawn By: