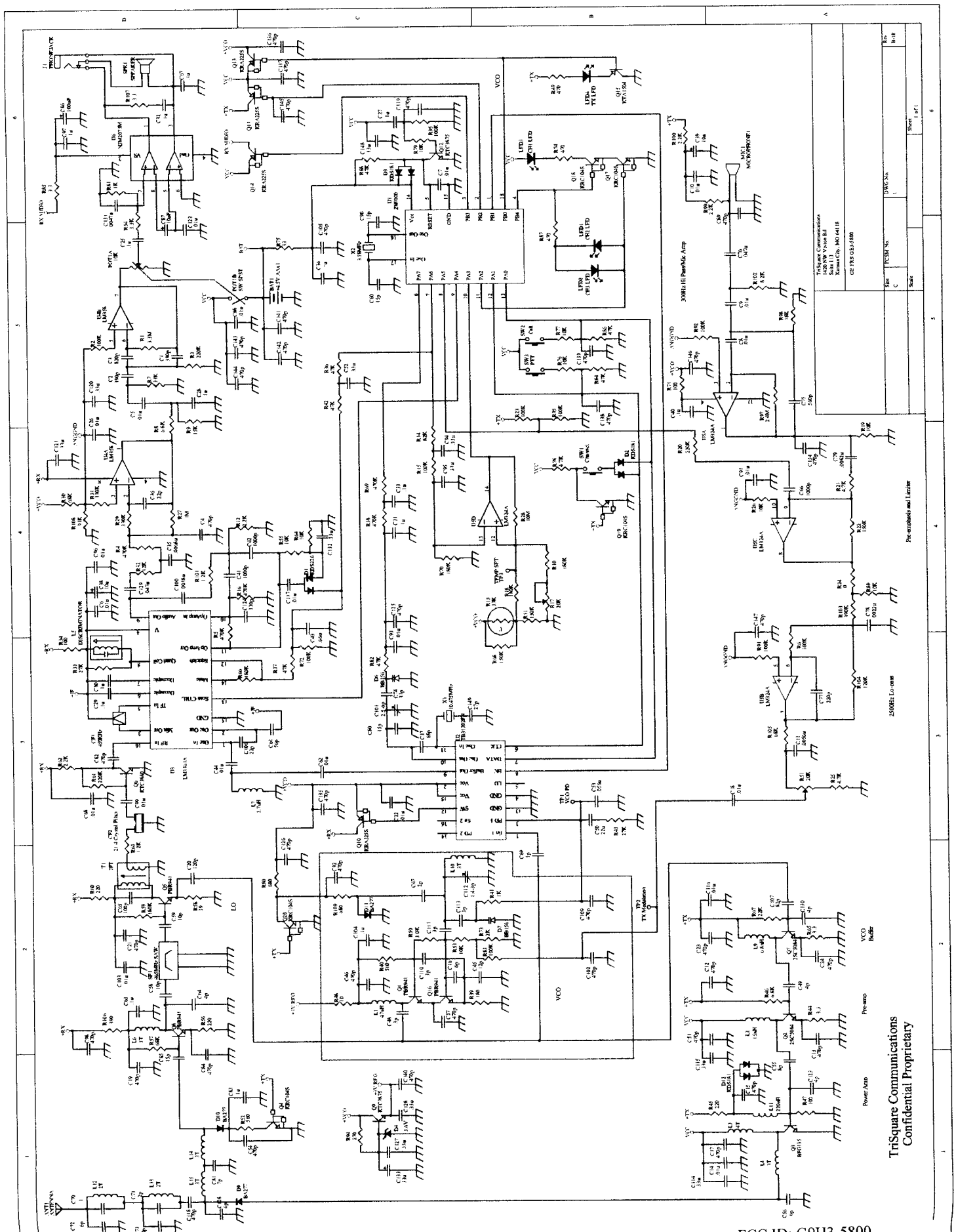

FCC ID: G9H3-5800
Marstech Report No. 99563D
EXHIBIT B(2)