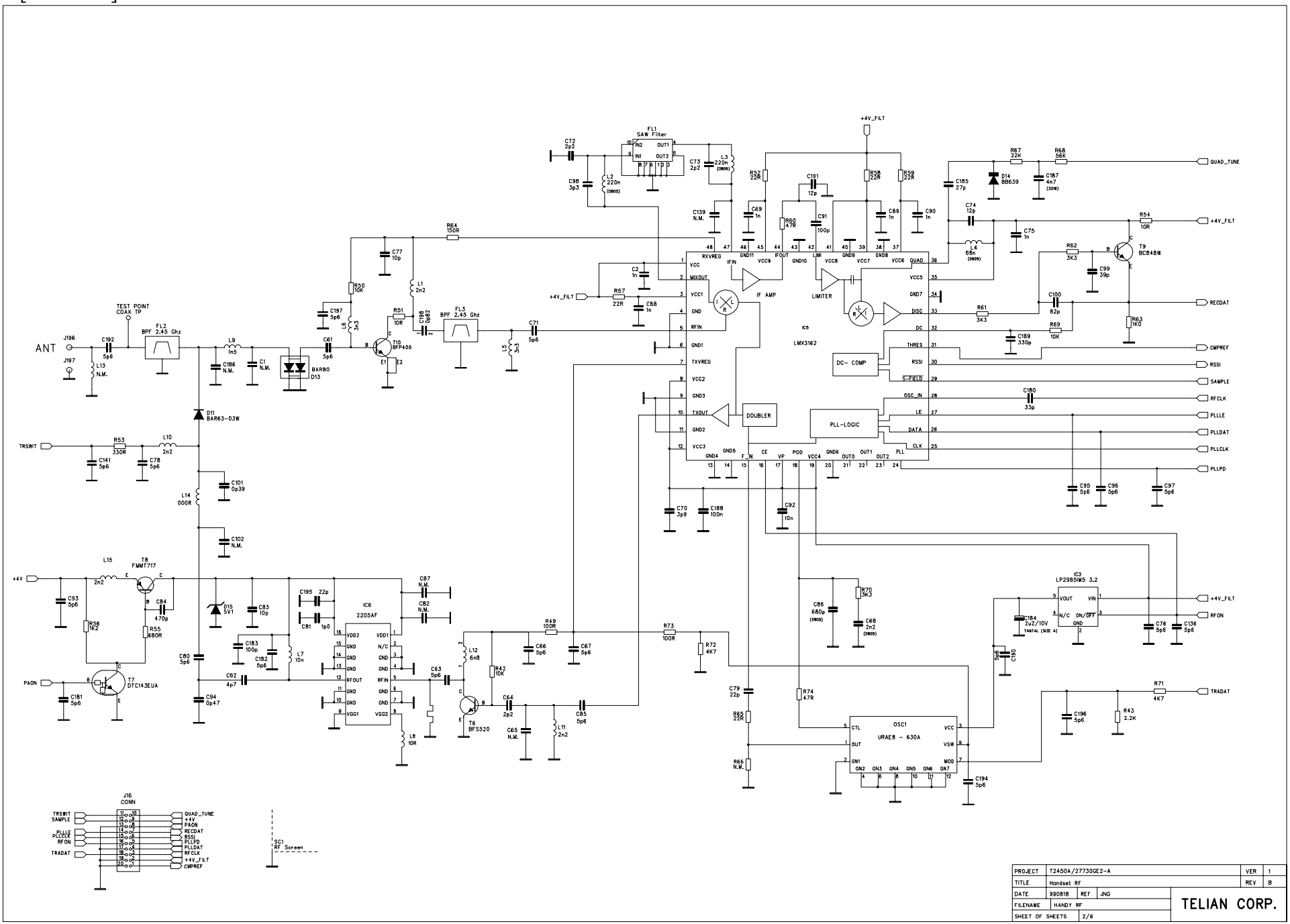27730[HANDY RF]-14.sch-1 - Fri Dec 17 23:39:41 1999