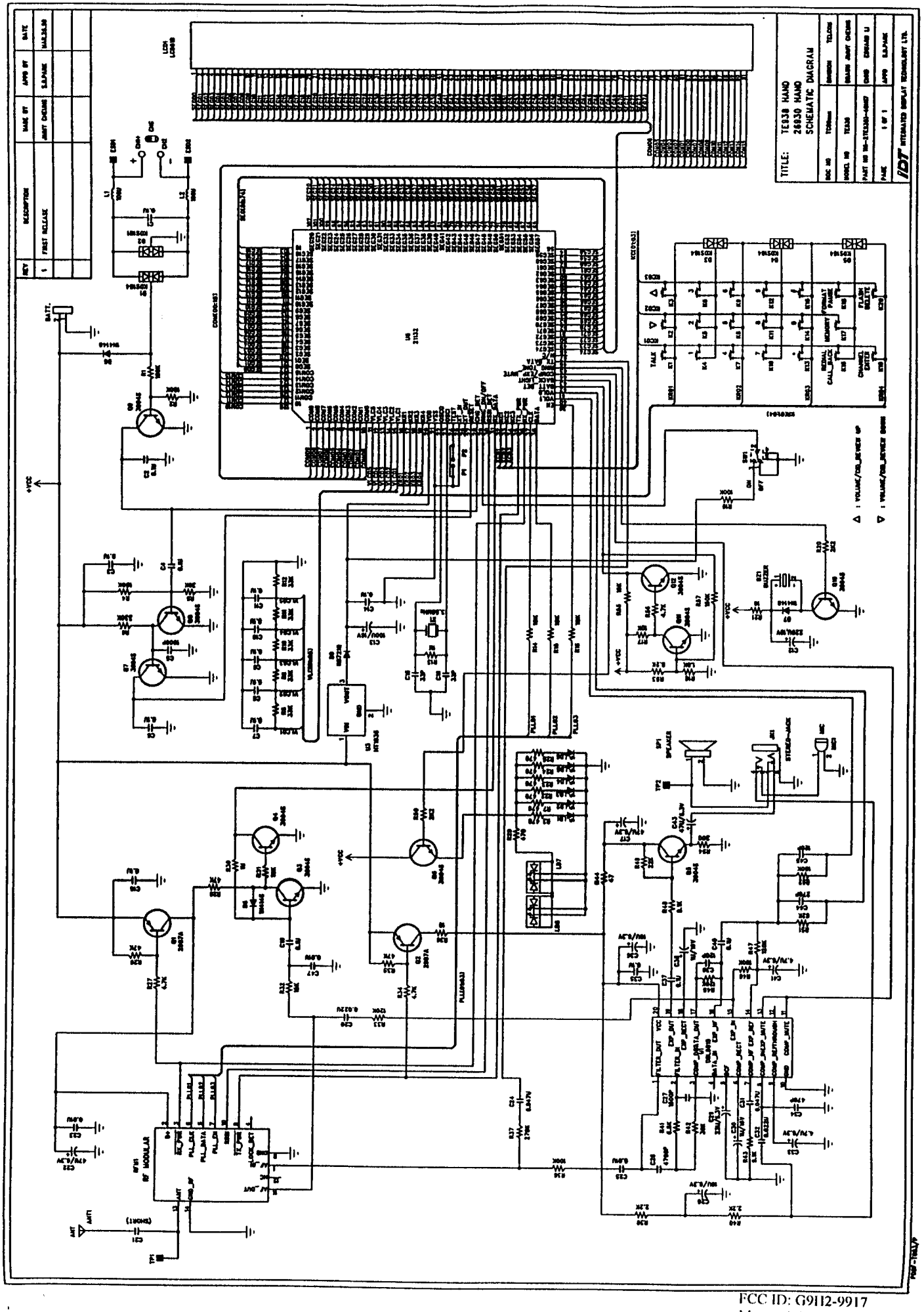

FCC ID: G9I2-9917
Marstech Report No. 99140D
EXHIBIT C(2)-1

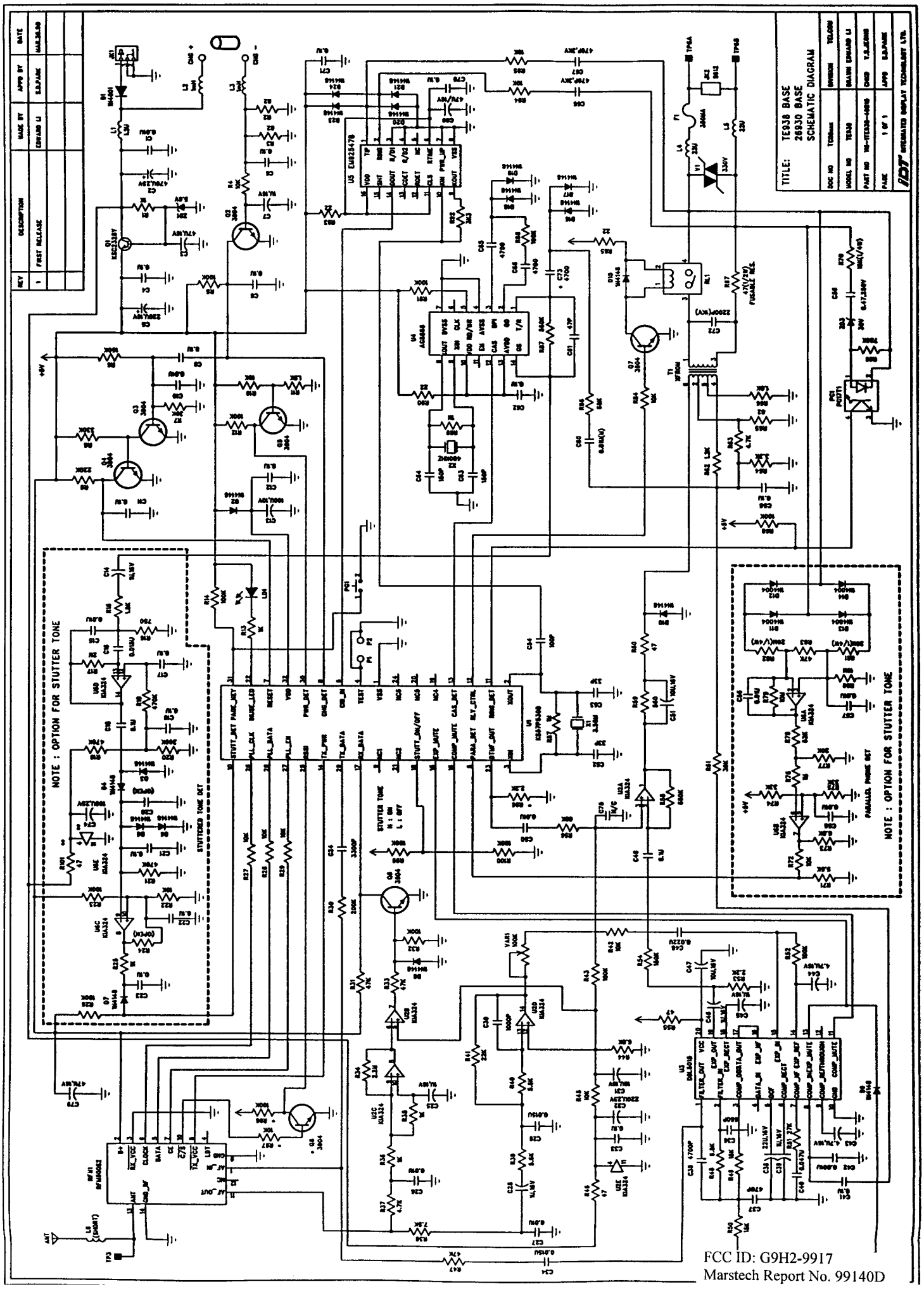

FCC ID: G9H2-9917
Marstech Report No. 99140D