EXHIBIT C

[FCC Ref. 2.1033(b)(5)]

"Block and Schematic Diagrams"

Exhibit C(1)-1 to C(1)-2 - Block Diagram
Exhibit C(2)-1 to C(2)-4 - Schematics

Hand-block.sch-1 - Tue Dec 17 12:34:16 2002

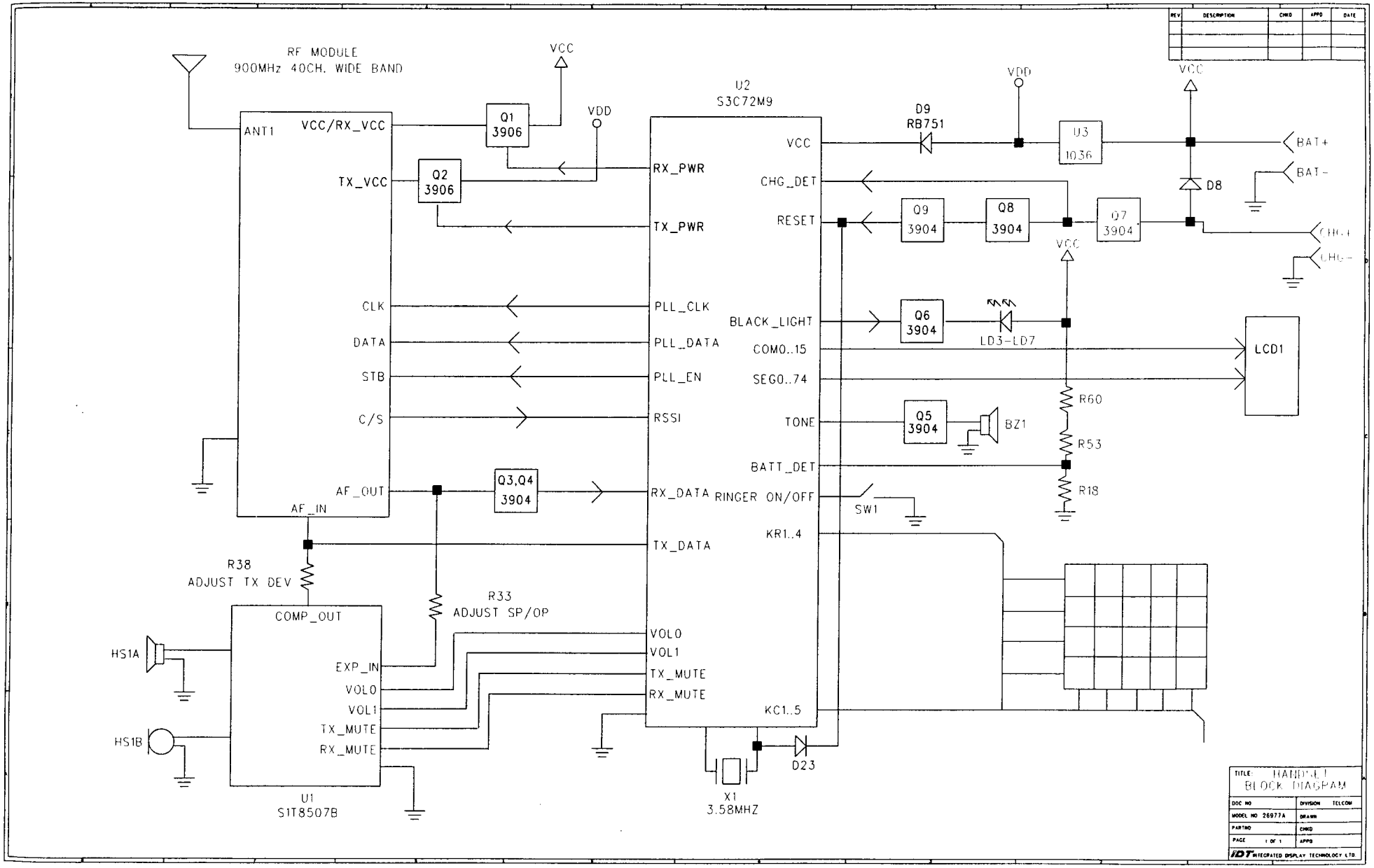

FCC ID: G9H2-6977A
Marstech Report No. 22396D
EXHIBIT C(1)-1

Base-block.sch-1 - Tue Dec 17 12:33:54 2002

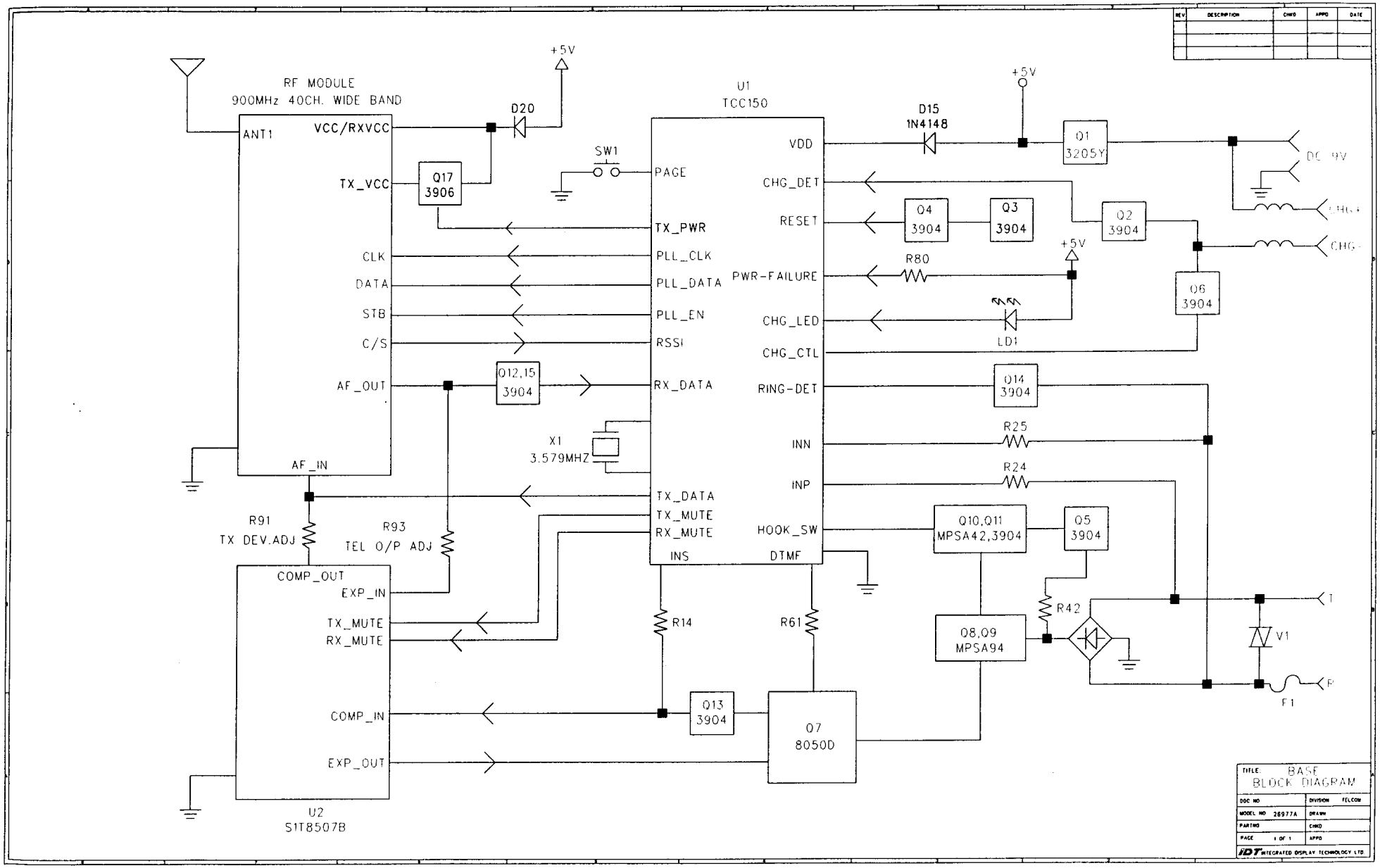

FCC ID: G9H2-6977A
Marstech Report No. 22396D
EXHIBIT C(1)-2