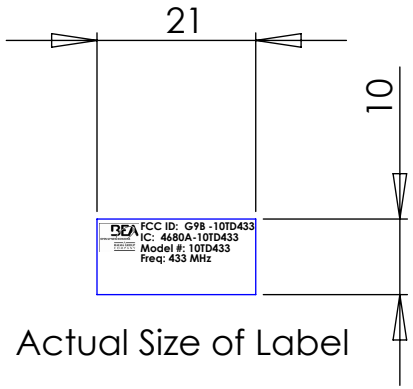

Actual Size of Label

PROPRIETARY AND CONFIDENTIAL

THE INFORMATION CONTANIED IN THIS DRAWING IS THE SOLE PROPERTY OF BEA INC. ANY REPRODUCTION IN PART OR AS A WHOLE WITHOUT THE WRITTEN PERMISSION OF BEA, INC. PROHIBITED.

MATERIAL:

FINISH:

VENDOR:

UNLESS OTHERWISE SPECIFIED:
DIMENSIONS ARE IN MILLIMETERS.
DO NOT SCALE DRAWING.
CAD GENERATED DRAWING.
DO NOT MANUALLY UPDATE.

Dimensional Tolerances

Dimension in mm	>0.5 to 3	> 3 to 6	> 6 to 30	> 30 to 120	> 120 to 400	>400 to 1000	> 1000 to 2000	> 2000 to 4000	> 4000 to 8000	> 8000 to 12000
Tolerance	± 0.1	± 0.1	± 0.2	± 0.3	± 0.5	± 0.8	± 1.2	± 2	± 3	± 4

Angular Tolerance

Angle	... 10	> 10 to 50	>50 to 120	> 120 to 400
Tolerance	± 1°	± 30'	± 20'	± 10'

APPROVALS	DATE
DRAWN JMM	8-22-07
CHECKED --	--
RESP ENG --	--
MFG ENG --	--
QUAL ENG --	--

BEA, INC.
100 Enterprise Drive
Pittsburgh, PA 15275
(412)249-4100
www.beainc.com

TITLE:

10RF433 Transmitter Label Art

SIZE A | DWG. NO. 10TD433FCC | REV. 01

SCALE 1:1 | CAD FILE: | SHEET 1 OF 1
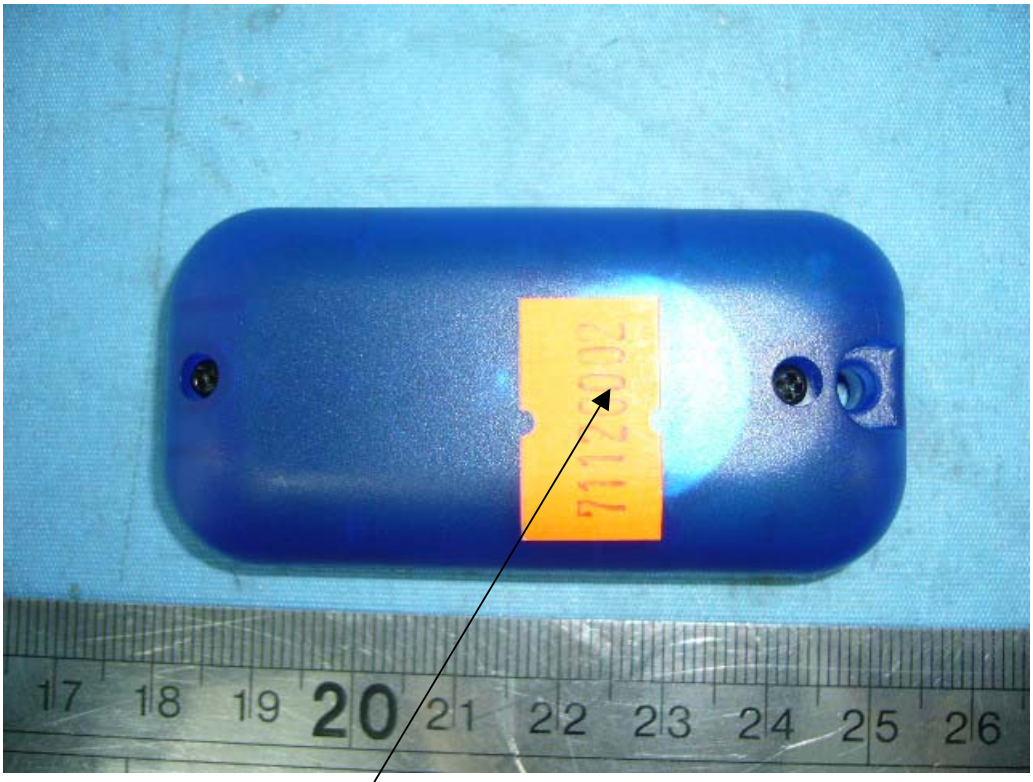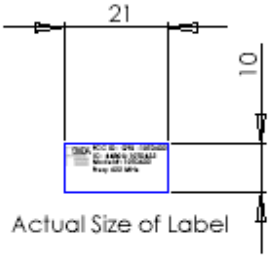
LABEL LOCATION