House Q1

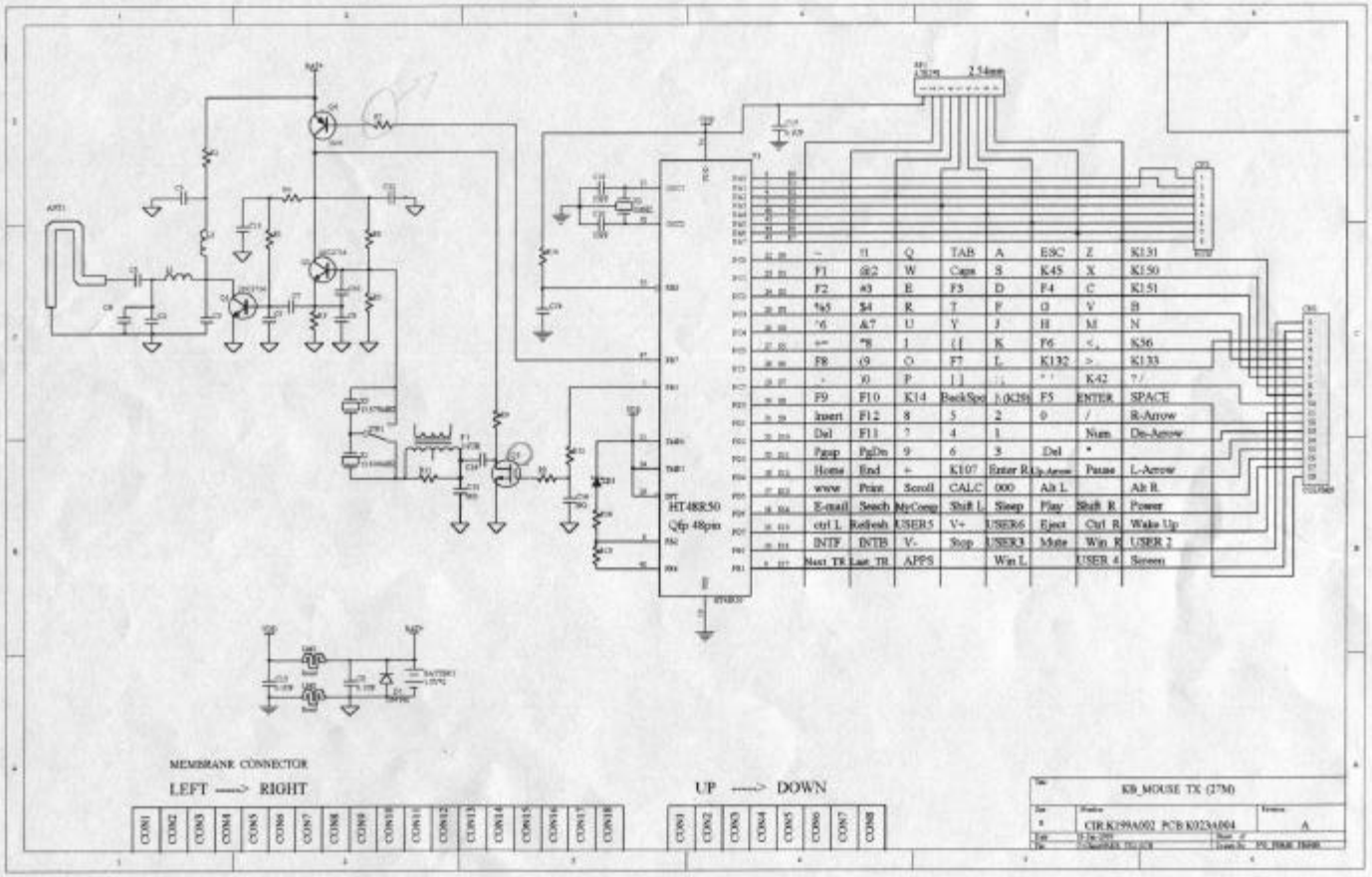

HT48R50
Qfp 48pin
MEMBRANE CONNECTOR
LEFT ----> RIGHT
UP ----> DOWN
CON1 CON2 CON3 CON4 CON5 CON6 CON7 CON8 CON9 CON10 CON11 CON12 CON13 CON14 CON15 CON16 CON17 CON18
CON1 CON2 CON3 CON4 CON5 CON6 CON7 CON8
KB_MOUSE TX (27M)
CIR K199A002 PCB K023A004
A