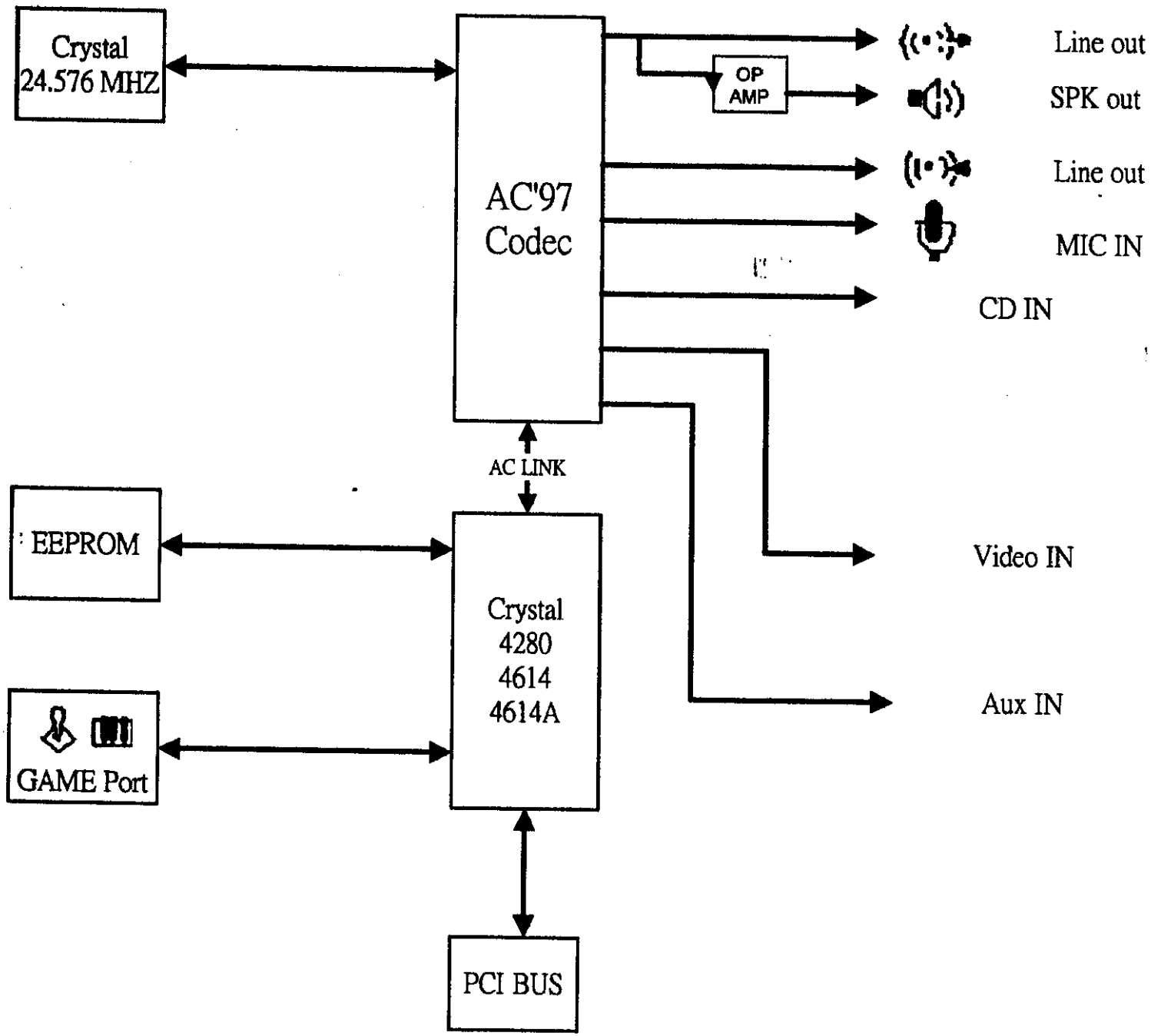FCC ID:FSUG8012