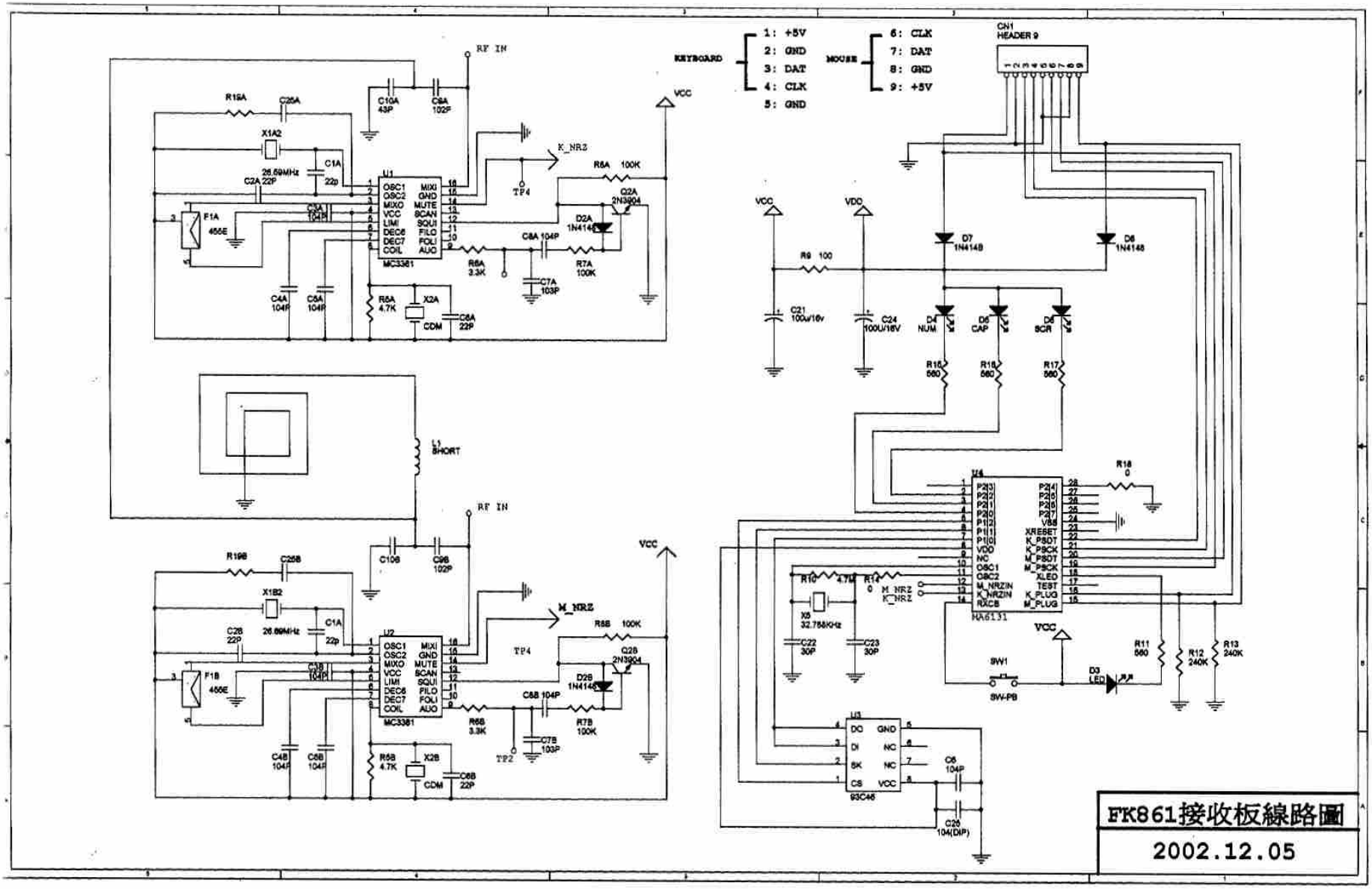
KEYBOARD
1: +5V
2: GND
3: DAT
4: CLK
5: GND
MOUSE
6: CLK
7: DAT
8: GND
9: +5V
CN1
HEADER 9
RF IN
VCC
VDD
K_NRZ
M_NRZ
TP4
TP2
U1
U2
U4
U3
MC3361
MX6131
93C46
L1
SHORT
X1A2
X1B2
26.69MHz
X3
32.768KHz
F1A
F1B
455E
SW1
SW-PB
D3
LED
CDM
FK861接收板線路圖
2002.12.05

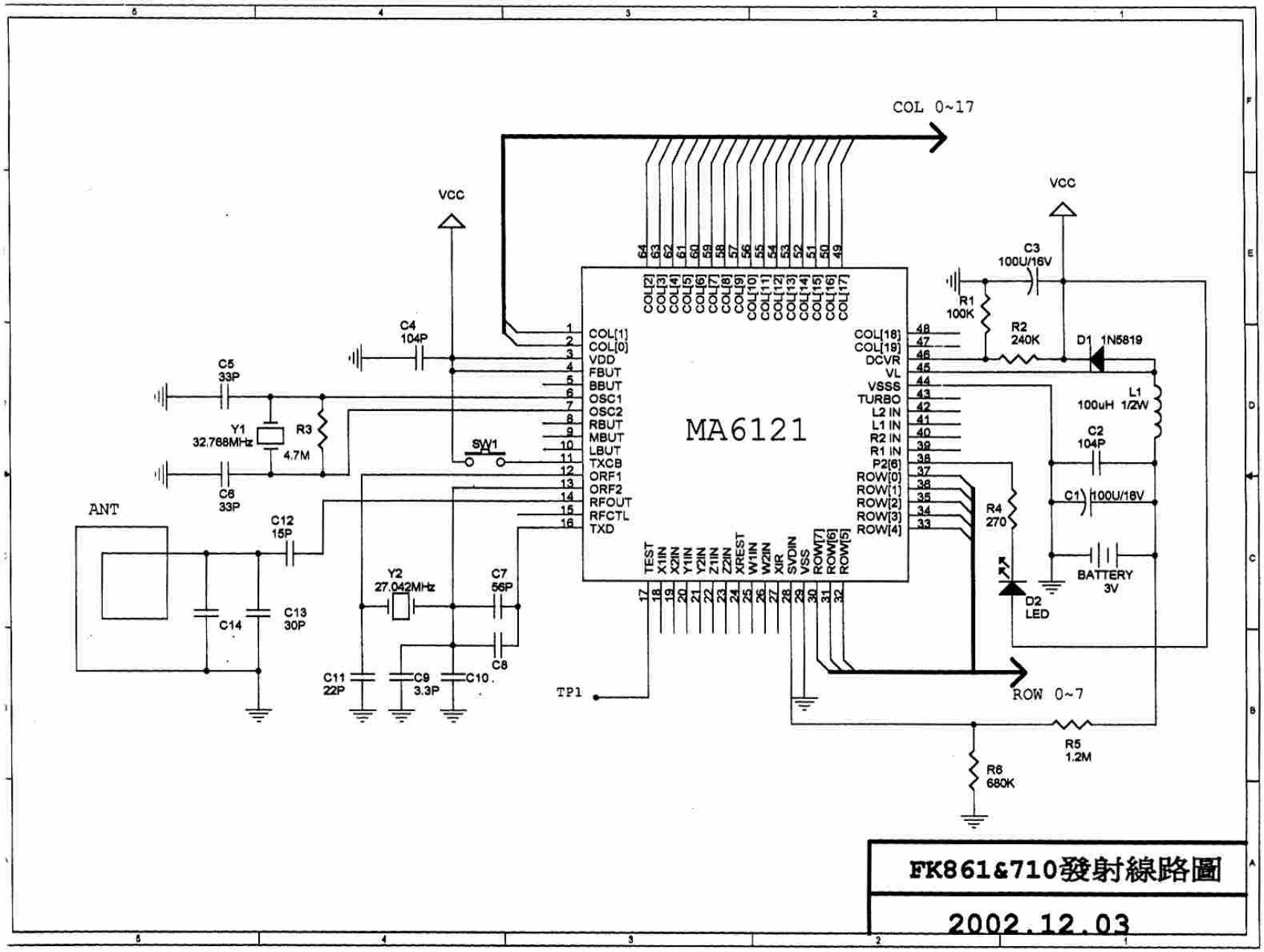

FK861&710發射線路圖

2002.12.03