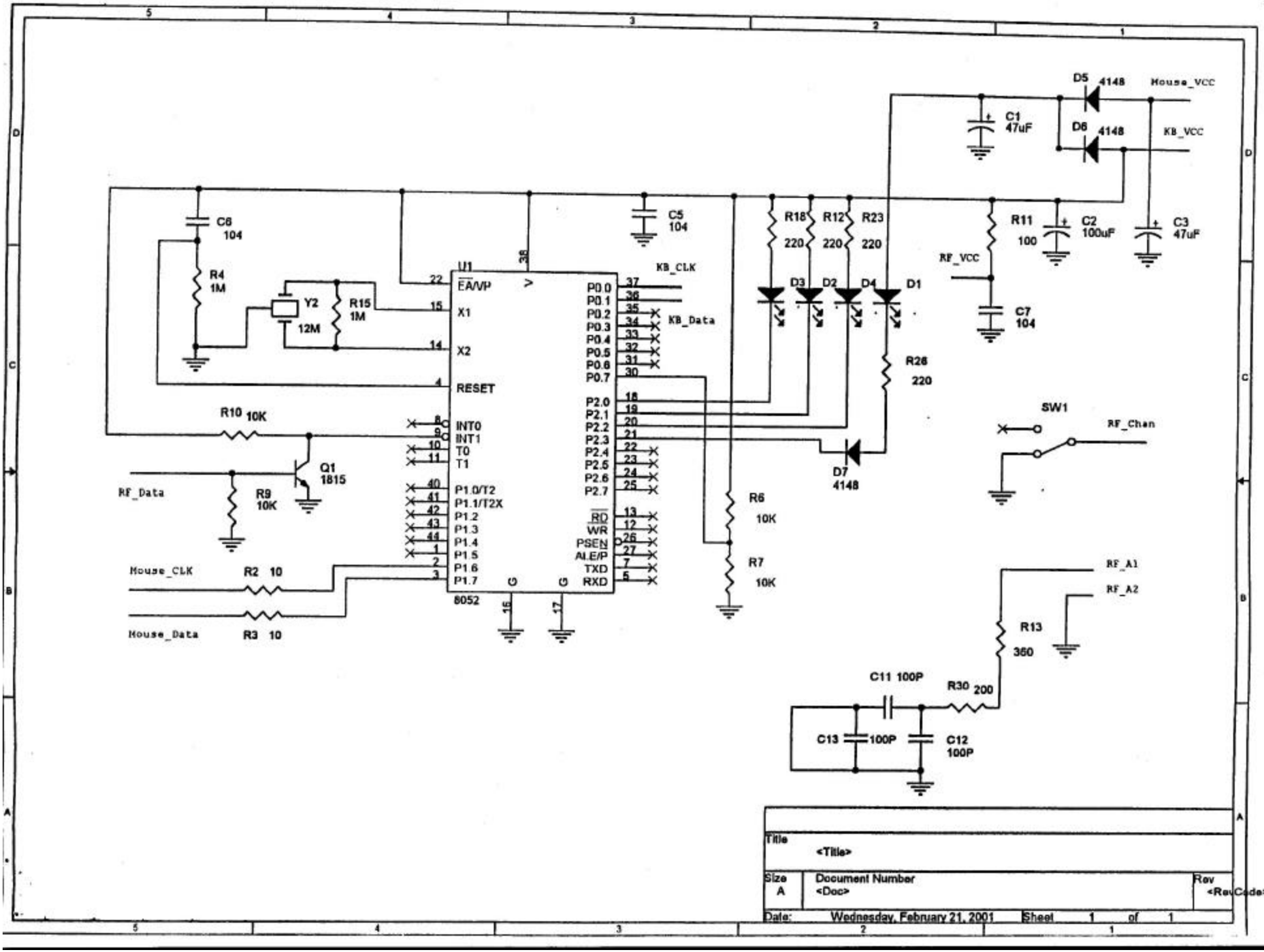
D5 4148
Mouse_VCC
D6 4148
KB_VCC
C1 47uF
C2 100uF
C3 47uF
R11 100
RF_VCC
C7 104
C5 104
C6 104
R4 1M
Y2 12M
R15 1M
U1
EA/VP
X1
X2
RESET
INT0
INT1
T0
T1
P1.0/T2
P1.1/T2X
P1.2
P1.3
P1.4
P1.5
P1.6
P1.7
8052
P0.0
P0.1
P0.2
P0.3
P0.4
P0.5
P0.6
P0.7
P2.0
P2.1
P2.2
P2.3
P2.4
P2.5
P2.6
P2.7
RD
WR
PSEN
ALE/P
TXD
RXD
KB_CLK
KB_Data
R18 220
R12 220
R23 220
D3
D2
D4
D1
R26 220
D7 4148
R6 10K
R7 10K
SW1
RF_Chan
R10 10K
Q1 1815
R9 10K
RF_Data
Mouse_CLK
R2 10
Mouse_Data
R3 10
RF_A1
RF_A2
R13 360
C11 100P
R30 200
C13 100P
C12 100P
Title
<Title>
Size A
Document Number
<Doc>
Rev
<RevCode>
Date: Wednesday, February 21, 2001
Sheet 1 of 1

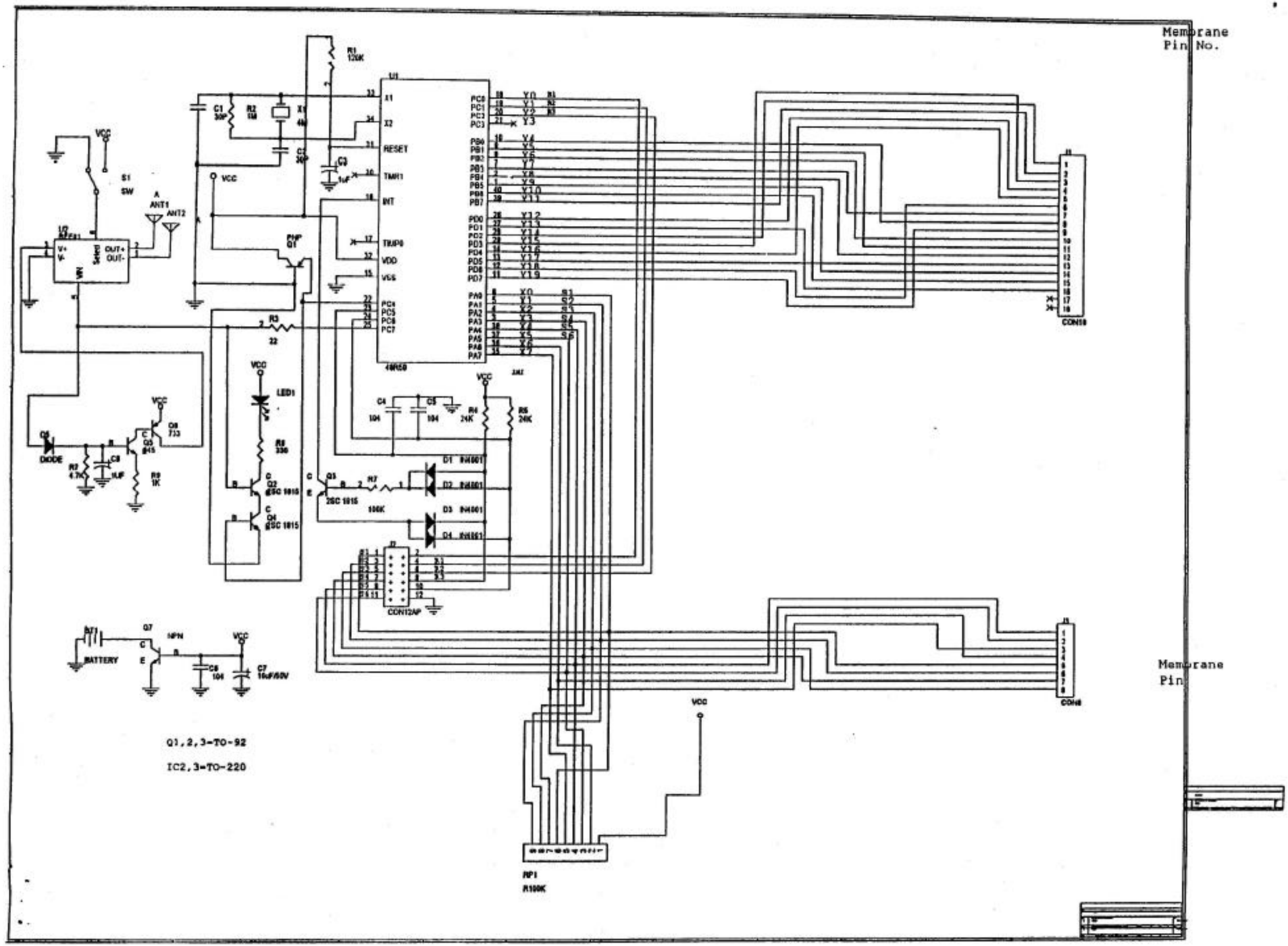
Membrane
Pin No.
Membrane
Pin
Q1,2,3-TO-92
IC2,3-TO-220
VCC
S1
SW
ANT1
ANT2
R1
120K
C1
30P
R2
1M
X1
4M
C2
30P
C3
1uF
U1
40H50
RESET
TMR1
INT
TMR0
VDD
VSS
R3
22
LED1
R6
330
Q2
2SC 1815
Q4
2SC 1815
Q3
2SC 1815
R7
100K
C4
104
C5
104
R4
24K
R5
24K
D1 IN4001
D2 IN4001
D3 IN4001
D4 IN4001
J7
CON12AP
J1
CON10
J2
CON8
DIODE
Q6
733
Q5
945
R8
4.7K
C8
1uF
R9
1K
BATTERY
Q7
NPN
C6
104
C7
10uF/50V
RP1
R100K