K361 方塊圖

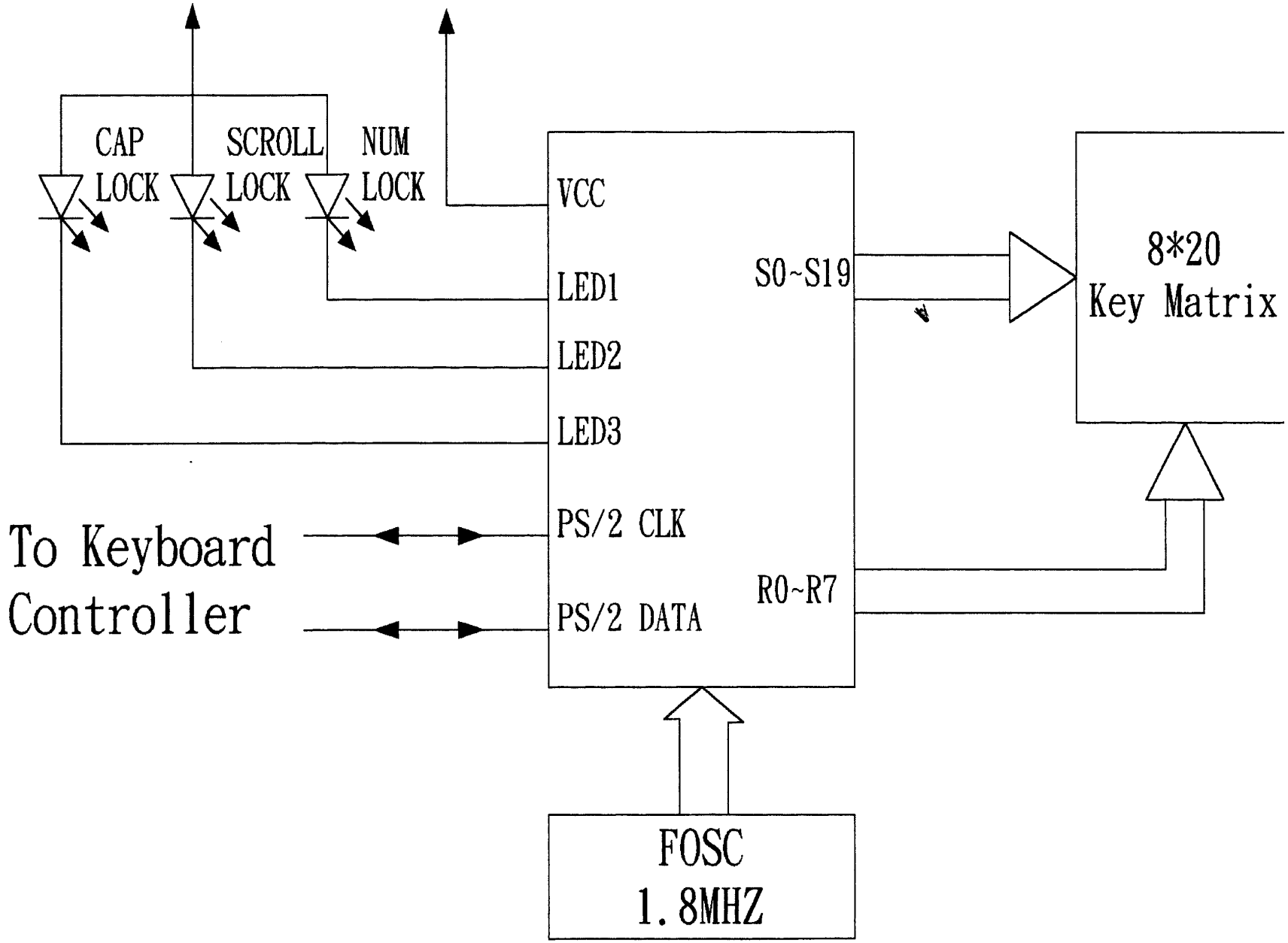
CAP
LOCK
SCROLL
LOCK
NUM
LOCK
VCC
LED1
LED2
LED3
PS/2 CLK
PS/2 DATA
S0~S19
R0~R7
8*20
Key Matrix
To Keyboard
Controller
FOSC
1.8MHZ