4. Block Diagram(s)

Figure 4.1 Block diagram of system, Page 13.A

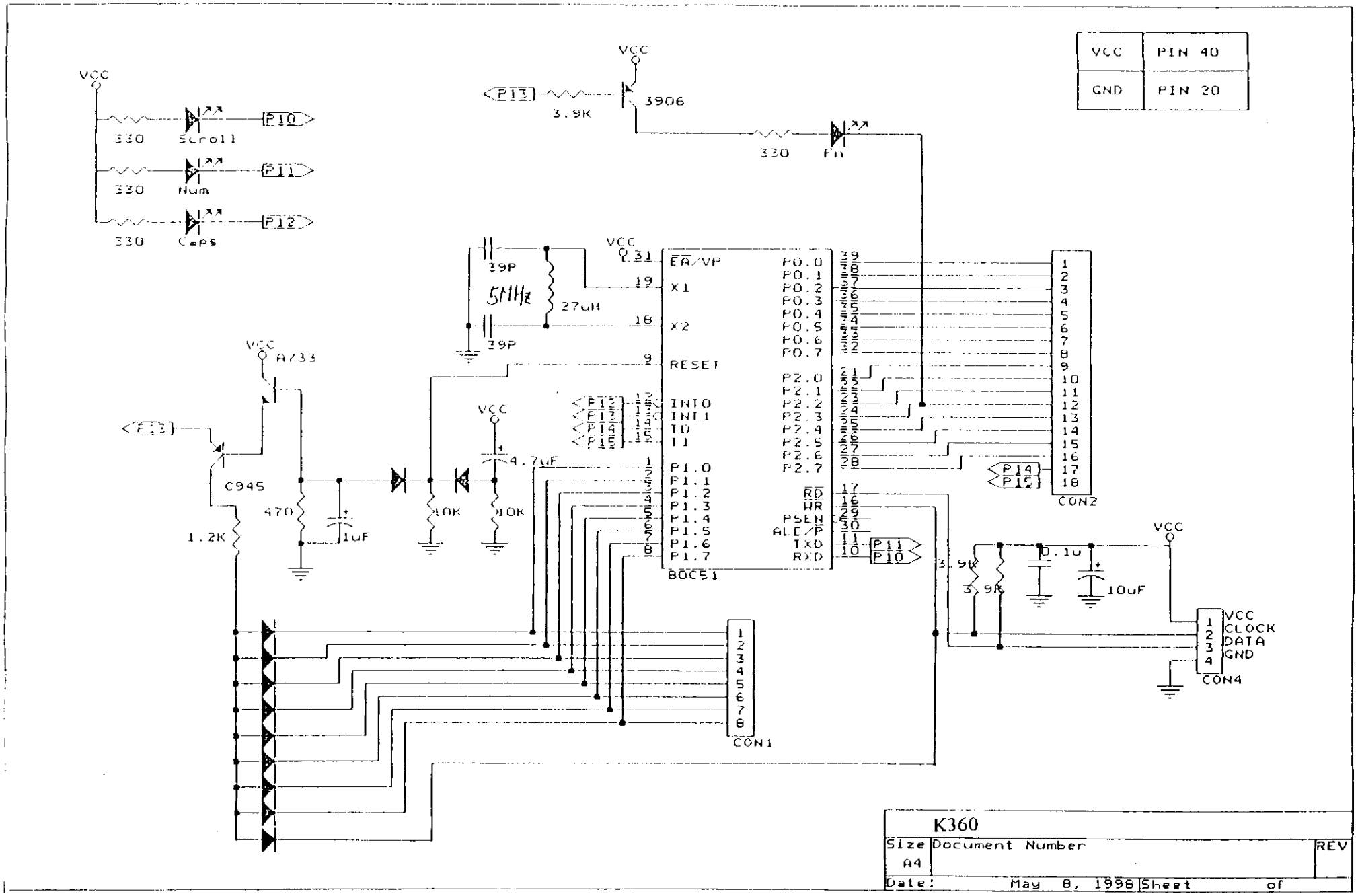

VCC	PIN 40
GND	PIN 20

K360

Size	Document Number	REV
A4		
Date: May 8, 1998	Sheet of	