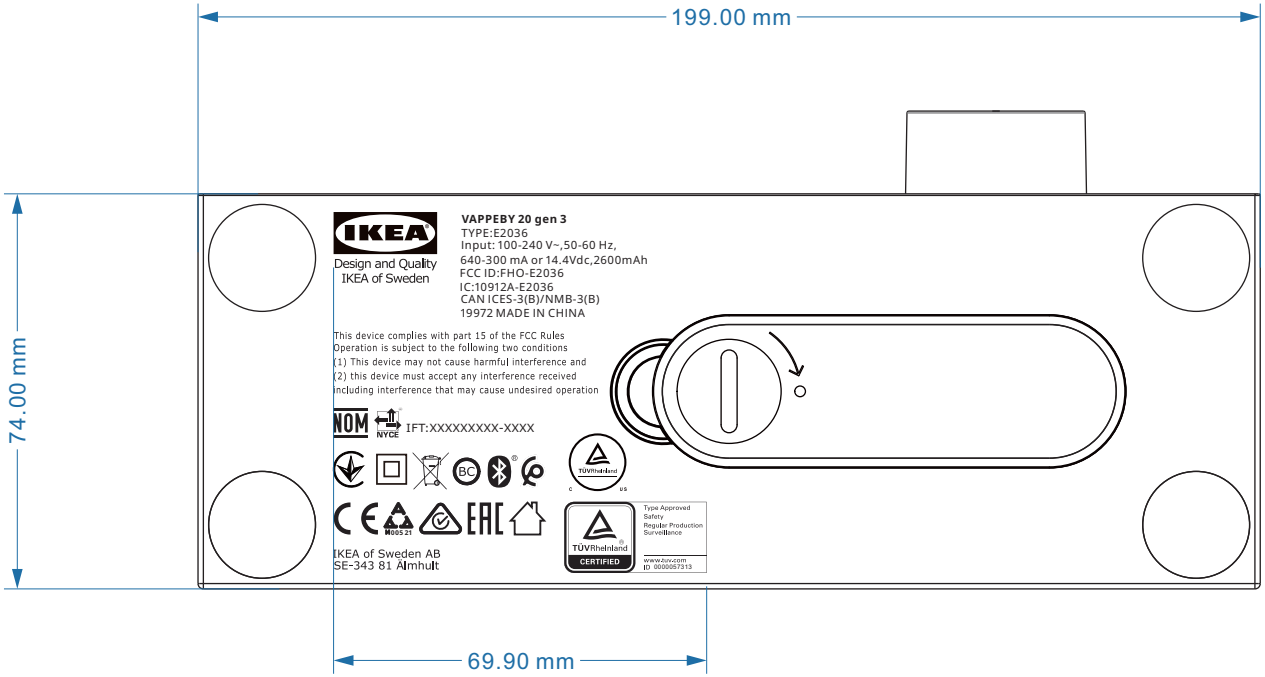
199.00 mm
74.00 mm
69.90 mm
IKEA
Design and Quality
IKEA of Sweden
VAPPEBY 20 gen 3
TYPE:E2036
Input: 100-240 V~,50-60 Hz,
640-300 mA or 14.4Vdc,2600mAh
FCC ID:FHO-E2036
IC:10912A-E2036
CAN ICES-3(B)/NMB-3(B)
19972 MADE IN CHINA
This device complies with part 15 of the FCC Rules
Operation is subject to the following two conditions
(1) This device may not cause harmful interference and
(2) this device must accept any interference received
including interference that may cause undesired operation
NOM
NYCE
IFT:XXXXXXXXX-XXXX
M005 21
IKEA of Sweden AB
SE-343 81 Älmhult
TÜVRheinland
CERTIFIED
Type Approved
Safety
Regular Production
Surveillance
www.tuv.com
ID 0000057313

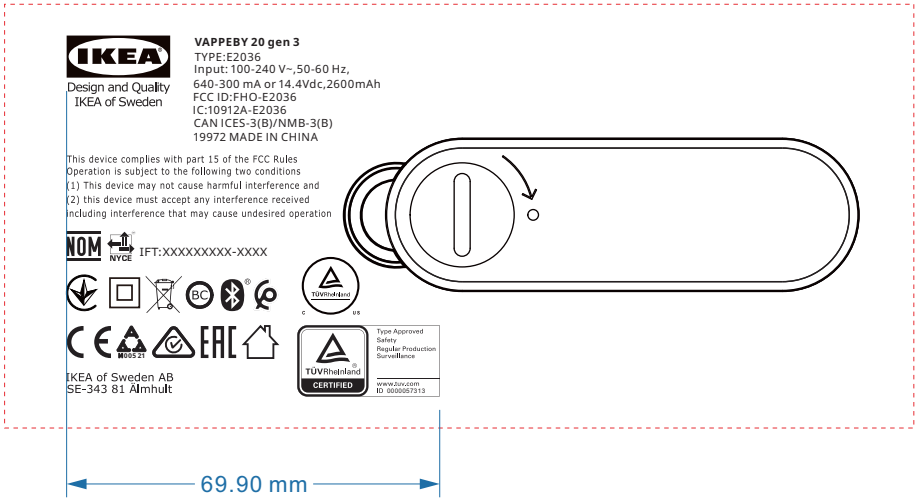
IKEA
Design and Quality
IKEA of Sweden
VAPPEBY 20 gen 3
TYPE:E2036
Input: 100-240 V~,50-60 Hz,
640-300 mA or 14.4Vdc,2600mAh
FCC ID:FHO-E2036
IC:10912A-E2036
CAN ICES-3(B)/NMB-3(B)
19972 MADE IN CHINA
This device complies with part 15 of the FCC Rules
Operation is subject to the following two conditions
(1) This device may not cause harmful interference and
(2) this device must accept any interference received
including interference that may cause undesired operation
NOM
NYCE
IFT:XXXXXXXXX-XXXX
M005 21
IKEA of Sweden AB
SE-343 81 Älmhult
TÜVRheinland
CERTIFIED
Type Approved
Safety
Regular Production
Surveillance
www.tuv.com
ID 0000057313
69.90 mm