REV.	DATE	DESCRIPTION	APP'D	CHECKED	DRAWER
02	2006/12/19				Chenlingyan
03	2008/09/11				WuKeHua
03	2008/10/06	A			Ryan
04	2008/10/08	B			Ryan

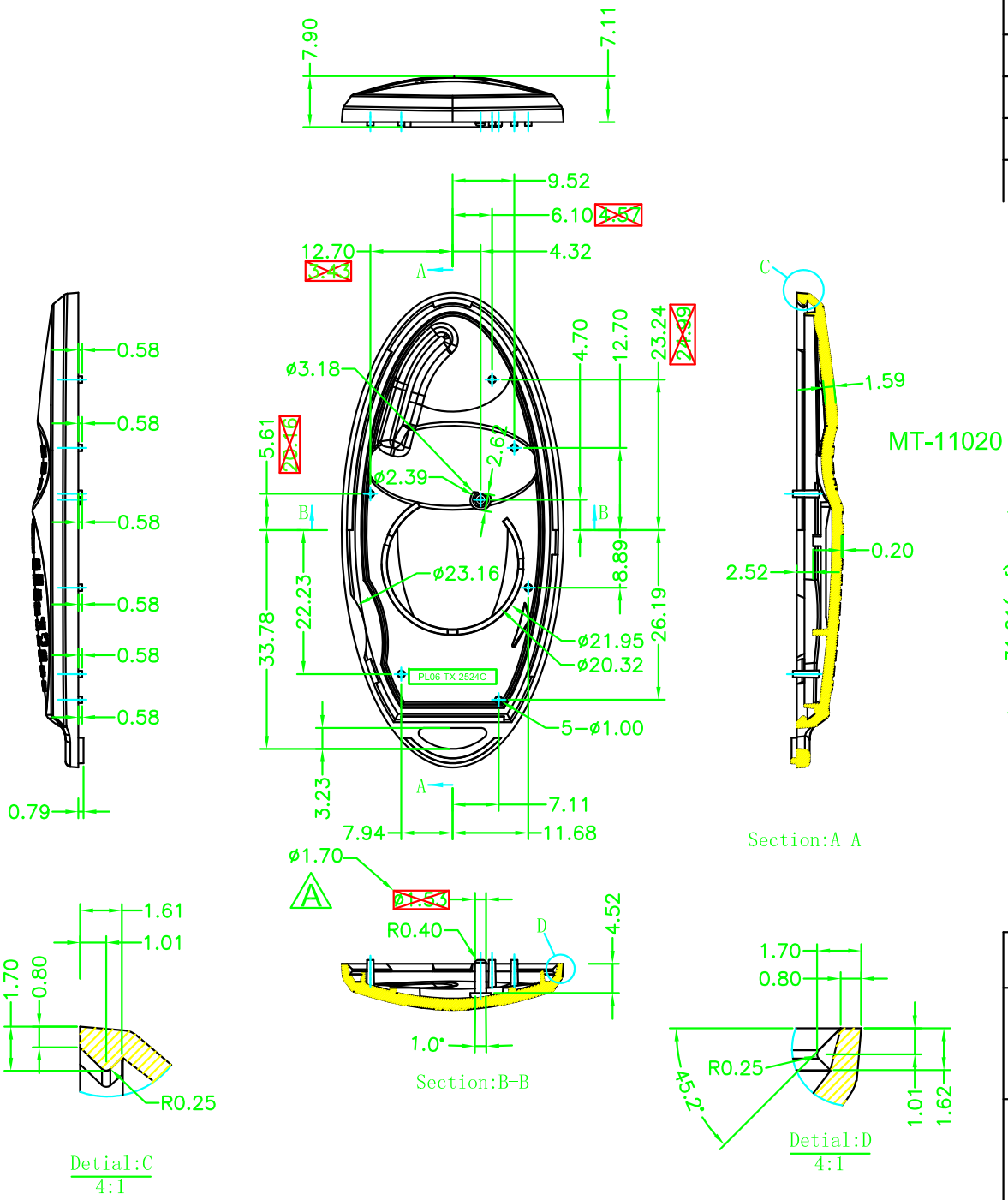

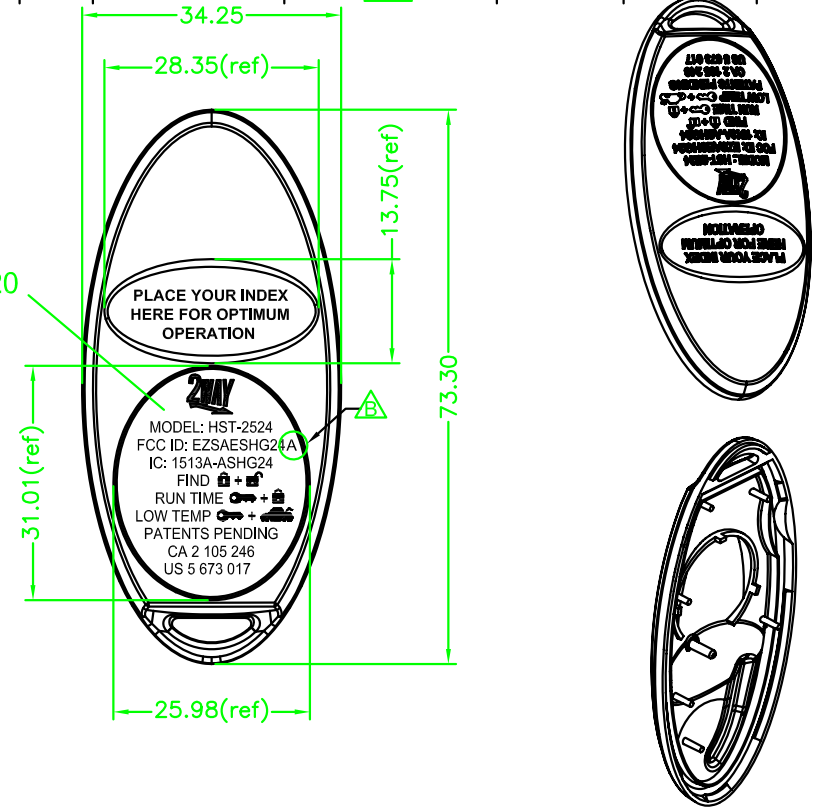

UNIT: MM	MATERIAL: PC+ABS(BLACK)			TITLE: T2524下盖	
TOLERANCE: 0. : ±0.3 0.0 : ±0.2 0.00: ±0.10 A° : ±1.0° Do not scale	FINISH: MT-11020			PART NO: PL06-TX-2524C	
	SCALE: 1 : 1	PROJECTION	SIZE A4	DWG. NO. PL06-TX-2524B	SHEET NO: 1 OF 1

PORTMAN