DRG. No. D01510

DO NOT SCALE.

A4

Iss.	Date.	Revision.	Init.
3	27-11-03	CN001835	MDS
2	8-5-03	CN001823	MDS
1	20-11-02	DRAWN	MDS

Drawn:	MDS	20-11-02
Checked:		
Authorised:	KOF	28-3-03

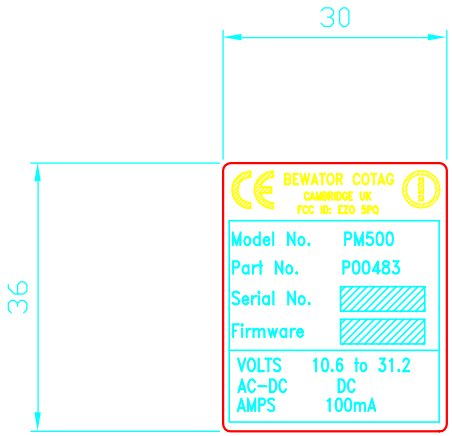

PRINTING NOTES

1. ALL TEXT AND GRAPHICS TO BE BLACK ON A WHITE BACKGROUND
2. PRINT ONTO A STANDARD SELF-ADHESIVE LABEL PART No. H258 USING A BRADY BP4000 PRINTER AND SOFTWARE
3. SEE D00600 FOR CURRENT FIRMWARE REVISION.
4. USE FILE REFERENCE \1510.

COTAG™

Bewator Cotag
A division of Bewator Group Ltd.
Mercers Row, Cambridge. CB5 8EX.
Tel: 01223 321535
Fax: 01223 366799

All rights reserved. Reproduction or issue to third parties in any form whatever is not permitted without written authority from the proprietors. ©BEWATOR GROUP LTD.

Used on				
	DL00483			

Third Angle Projection

Scale: N.T.S.

All dimensions in MILLIMETRES Unless otherwise stated

Tolerance: – Unless otherwise stated

Material: H258

Finish: AS SHOWN

Title: PRODUCT LABEL PM500

Drawing Number: D01510

Sht. 1 of: 1